trumeter
innovation by design

Model 6300

Electronic LCD Counter



The Model 63 range of Electronic Counters with 8 LCD digits bring together features, including optional programmable alert or preset capability.

The front utilizes a high-contrast, reflective, 8-digit LCD with 0.32 inch [8mm] digits and seven icons, while at the back end Dry Contact, Low Voltage DC, and High Voltage DC and AC Inputs are available.

The Model 63 family is designed with a rugged plastic housing that is qualified to NEMA 4/4X when properly installed using the gasket supplied. In addition, the unit is compliant with CE EMC standards to EN61326:2001 for industrial applications, recognized by UL for U.S. and Canadian safety standards, and it is compliant to European RoHS and WEEE standards.

Key Features

- Reflective LCD Display with 8 large (8mm) digits
- Choice of I/O compliment that includes:
  - Switch Input (No voltage)
  - Low DC Voltage (3-30VDC) <2mA
  - High Voltage (20-300VAC or 10-300VDC) <2mA
- Internal 10+ year battery
- NEMA 4/4X, 12, and IP66 rated
- Optional Front Panel Programming for flexible
- Redi-Alert or Preset functionality
- Optional Redi-Alert Functions:
  - 3 Redi-Alerts are available with Front Panel Programming option
- Optional Preset Counter Mode:
  - Available with Front Panel Programming option
- EMC Compliant to EN61326:2001 for industrial environments
- CE compliant, UL and cUL recognized
- European WEEE & RoHS Compliant

trumeter
innovation by design

Operations

Counter Operation
Any of four different counting methods may be specified in each unit. These counting methods are factory set.

Dual Range:
In the Dual Range Mode, the counter waits for a pulse on either Input A or Input B. The first input to have a pulse is recognized and its pulses are counted. The other input is ignored until the counter is reset. The rated speed for one of the inputs is 40 Hz and for the other input it is 500 Hz. This mode is best for single up-counter operation.

1. Units are dispatched in a factory reset state.
2. The first time the user chooses to wire up to low speed or high speed count, then that unit is set for life – it cannot be changed without disassembling the unit.

I/O Functions
The I/O functions can be mixed and matched to maximize the functionality of the counter. There are three types of inputs that the counter can accept. The interfaces for each are factory set. The inputs can be:

- Switch – open circuit or switch closure
- Low Voltage DC – Low input is less than 1VDC and High Input is 3 – 30VDC.
- High Voltage DC or AC – Low is less than 3VDC or 3VAC. A High Input is either 10 – 300VDC or 20-300VAC.

For the Switch and Low Voltage DC Counters, there are six screw terminals for all of the I/O. For the High Voltage Counters, there are four screw terminals for the I/O. The combinations of the I/O and power supply are factory set.

Pulse Inputs:
The pulse inputs are those inputs that are counted.

Remote Reset:
When the remote reset is at a high level, the counter will reset.

Front Panel Reset Enable:
The counter will reset when the Front Panel Reset Enable is at a high level, and the Front Panel Reset Switch is pressed.
The counter will not reset when the Front Panel Reset Enable is at a low level and the Front Panel Reset Switch is pressed.

Optional Preset Function
Each counter may be placed in a preset operating mode. This mode can be programmed through the front panel for those units that have the front panel programming option. It may also be factory programmed. IT IS NOT RECOMMENDED THAT THE PRESET FUNCTION BE USED AT THE SAME TIME THAT ALERTS ARE ENABLED.

The preset counters can be set up for either automatic reset or external (front panel or remote) reset.

Optional Alert Functions
The Model 63 Counter can be programmed to operate as a maintenance device in which alerts notify the user of certain maintenance actions to be taken after accumulation of a predefined number of counts. When the accumulated count equals the predefined alert value, an icon is illuminated on the display. When the alert is reset, the icon is turned off, but the count value is not reset.

There are two types of alerts. The first is a break-in alert. A break-in alert only occurs once at the start of unit operation. The second type of alert is recurring. A recurring alert occurs continuously at a predefined period. When tied to a break-in alert, the recurring alert will not begin its count until the break-in alert has occurred.

The intervals for the recurring alert can be performed as start-to start or end-to-start. A start-to-start interval count starts when the last alert is turned on. The end-to-start interval count starts when the last alert is turned off.

The Model 63 Counter can support three alerts using front panel programming and four alerts when factory programmed. IT IS NOT RECOMMEDED THAT THE PRESET FUNCTION BE USED AT THE SAME TIME THAT ALERTS ARE ENABLED. In both cases, Alert #1 is a break-in alert that is tied to Alert #2, which is recurring. Alert #3 is recurring, and Alert #4 can be factory set as either break-in or recurring. If Alert #4 is break-in, then it is tied to Alert #3.

The Model 63 Counter can be programmed to be latched or kept on for a predetermined number of counts. When latched, an external reset is required to turn off the alert.

Front Panel
The liquid crystal display is reflective with dark characters on a light background. There are 8 digits on the display. The standard display contains seven icons which can be assigned as desired to either alerts or a preset.

Model 63 Counters with the front panel programming option are capable of being programmed for either alerts or the preset function. There are two front panel switches. To begin programming, the two switches are pressed simultaneously. The programming menu must be completed in its entirety to return to normal operation. The switch functions are described as follows:

SEL: During normal operation, the displayed counters will be swapped when the SEL switch is pressed and released. During programming, this switch is used to select options.

RST: During normal operation, the RST switch is used for front panel reset. During programming, the RST switch is used to enter an option.

Resets
Unless using alerts, a reset returns the display to zero. If using alerts, the reset turns an alert off. There are three different reset configurations available:

Non-Reset: The counter can never be reset. A non-reset unit also has no front panel programming option.

Remote Reset: A model with Remote reset has a dedicated terminal for performing the reset function. The unit resets when the remote reset signal is at a high level. When the reset signal is at a low level, accumulating counts can occur.

Manual Reset: Manual reset occurs when the RST switch on the front of the counter is pressed. Counting resumes upon release of the RST switch. The exception to this operation is in the Dual Counter case in which the non-resettable counter cannot be reset.

Note: Some counters are equipped with a Manual Reset Enable Input. In this case, the Manual Reset Enable Input must be high for the RST switch to be functional.

trumeter
innovation by design

custom is our passion

Specifications

Display Figures:	8 LCD digits 0.32” [8mm] high
Annunciators Icon:	A choice of 7 Icons 0.08” [2mm] high
Reset:	Remote, manual & non-reset. Manual reset enable is available on some models
Speed: Low speed:	0-40 counts per second (min. 12.5ms-on, 12.5ms-off)
High speed:	0-500 counts per second (min. 1.0 ms-on, 1.0 ms-off)
Inputs Switch	(no voltage)
DC Voltage:	Absolute voltage range: -0.5 VDC, minimum to 30.0VDC, maximum VIH: 3.0 VDC, maximum VIL: 1.0 VDC, minimum
High Voltage AC/DC:	Absolute Maximum voltage: 300VAC/VDC VIH: 10VDC/20 VAC, max. VIL: 3VDC/3 VAC, minimum
Power:	Internally powered models: Self powered
Battery Life:	10 years
Mounting:	Panel with clip
Terminations:	Terminal block
Weight:	2 oz. [57g]
Environmental:	Temp. (Storage & Operating): -4˚F to +140˚F [-20˚C to +60˚C]
Humidity:	0 to 95% RH, non-condensing
Vibration:	Operating: 10 to 55 Hz, 0.01” [0.25mm] double amplitude
Non-operating:	10 to 55 Hz, 0.03” [0.75mm] double amplitude
Shock:	Operating: 10G’s Non-operating: 30G’s
Dielectric:	1000 VAC 50/60Hz for 1 minute
Accuracy:	100% (provided signal meets stated parameters)
EMC Compliance:	EN61326:1997 with A1: 1998 & A2:2001 for industrial environments
Enclosure:	NEMA 4/4X, 12, & IP66 compliance (from the front) when properly mounted using the optional gasket
Approvals:	CE compliant, UL & cUL recognized
Environmental Compliance:	Compliant to the European WEEE & RoHS

Notes
1. When interfacing the Model 63 with a Solid State Relay or AC Sensor, the leakage current needs to be considered.
2. The Absolute Voltage Range and the Absolute Maximum Voltage are the voltages at which operation beyond the specified limits may result in damage to the unit.

Dimensions

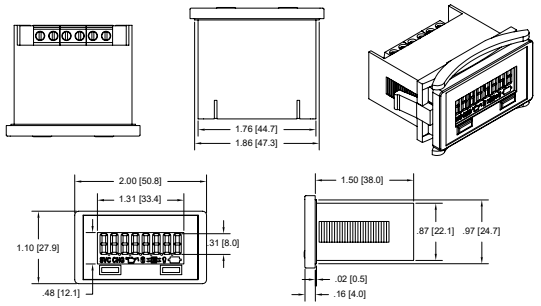

Panel Cutout: 1.79” [45.5mm] x 0.89” [22.6mm]
Recommended Panel Thickness: 0.125” [3.1mm]

Available Icons

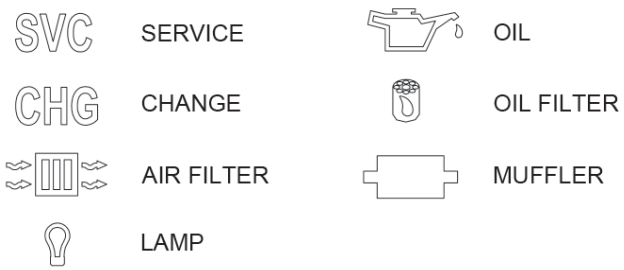

Part Numbers

Part Number	Description	Gasket
6300-0000-0000	DUAL RANGE COUNTER 40/500HZ DRY CONTACT INPUT REMOTE RESET	5003-013
6300-0500-0000	DUAL RANGE COUNTER 40/500HZ DRY CONTACT INPUT PROGRAMMING/FPRESET inc REDI-ALERTS	5003-013
6300-0600-0000	DUAL RANGE COUNTER 40/500HZ DRY CONTACT INPUT FPRESET **SPECIAL ORDER** MOQ = 50 PCS	5003-013
6300-1000-0000	DUAL RANGE COUNTER 40/500HZ 3-30 VDC INPUT REMOTE RESET	5003-013
6300-1500-0000	DUAL RANGE COUNTER 40/500HZ 3-30 VDC INPUT PROGRAMMING/FPRESET inc REDI-ALERTS	5003-013
6300-1600-0000	DUAL RANGE COUNTER 40/500HZ 3-30 VDC INPUT FPRESET **SPECIAL ORDER** MOQ = 50 PCS	5003-013
6300-2500-0000	DUAL RANGE COUNTER 40/500HZ 10-300/20-300 VDC/VAC INPUT PROGRAMMING/FPRESET inc REDI-ALERTS	5003-013
6300-2600-0000	DUAL RANGE COUNTER 40/500HZ 10-300/20-300 VDC/VAC INPUT FPRESET **SPECIAL ORDER ** MOQ = 50 PCS	5003-013
6301-2000-0000	COUNTER 40HZ - 10-300/20-300 VDC/VAC INPUT REMOTE RESET	5003-013

FOR FRONT PANEL PROGRAMMABLE PRESET AND REDI-ALERT OPTIONS PLEASE CONTACT US.



www.trumeter.com

Trumeter (Europe)
Pilot Mill
Alfred Street
Bury,
BL9 9EF
Tel: +44 161 674 0960
Email: sales.uk@trumeter.com

Trumeter (The Americas)
6601 Lyons Rd, Suite H-7,
Coconut Creek, Florida
FL 33073,
USA
Tel: +1 954 725 6699
Email: sales.usa@trumeter.com

Innovative Design Technologies Sdn. Bhd
Lot 5881, Lorong Iks Bukit Minyak 1
Taman Perindustrian Iks, 14000 Bukit Tengah
Penang, Malaysia
Web: www.idtworld.com
Tel: + 604 5015700
Email: sales.my@idtworld.com