Electromechanical pressure switches

For control circuits, types XMX and XMA

Presentation

References :
pages 3/2 and 3/3
Dimensions :
page 3/5

Functions

Pressure switches type XMX and XMA are switches for control circuits, with an adjustable differential.
They are used to control the pressure of water and air, up to 25 bar.

Equipment fitted to various models

Location of setting screw

Pressure switches type XMX have an internal setting screw, only accessible after removing the cover.
Pressure switches type XMA have an external setting screw, accessible without removing the cover.

Case

Pressure switches type XMX have a black opaque case.
Pressure switches type XMA can have a transparent case or a black opaque case.

Setting

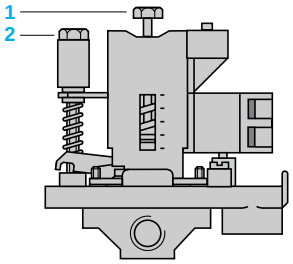

When setting XMX or XMA pressure switches, adjust the switching point on rising pressure (PH) first and then the switching point on falling pressure (PB).

Switching point on rising pressure
The switching point on rising pressure (PH) is set by adjusting screw-nut **1**.

Switching point on falling pressure
The switching point on falling pressure (PB) is set by adjusting screw-nut **2**.

Electromechanical pressure switches

For control circuits, types XMX and XMA

Characteristics

References :
pages 3/2 and 3/3
Dimensions :
page 3/5

Environment

Conforming to standards		CE, IEC/EN 60947-5-1
Product certifications		UL, CSA (pending)
Protective treatment		"TC"
Ambient air temperature	°C	Operation : - 25…+ 70. Storage : - 40…+ 70
Fluids controlled		Air, fresh water, sea water (0…+ 70 °C)
Materials		Case : polycarbonate impregnated with Lexan 500R fibre glass (black opaque cover) or polycarbonate impregnated with Lexan 123 fibre glass (transparent cover). Component materials in contact with fluid : chromated zinc alloy (fluid enrty), nitrile covered canvas (diaphragm)
Operating position		All positions
Electric shock protection		Class I conforming to IEC 60536
Degree of protection		IP 54 conforming to IEC/EN 60529
Operating rate	Operating cycl/min.	600
Repeat accuracy		< 3.5 %
Fluid connections		1/4" or 4 x 1/4" BSP (female) conforming to NF E 03-005, ISO 228
Electrical connections		Screw terminals. 2 tapped entries for Pg 13.5 cable gland

Contact block characteristics

Rated operational characteristics		~ AC-15, B300 (Ue = 240 V, Ie = 1.5 A ; Ue = 120 V, Ie = 3 A) ⎓ DC-13, R300 (Ue = 250 V, Ie = 0.1 A)
Rated insulation voltage	V	Ui = 500, conforming to IEC/EN 60947-1
Rated impulse withstand voltage	kV	U imp = 6 conforming to IEC/EN 60947-1
Contact operation		1 C/O single-pole contact, snap action
Terminal referencing		Conforming to CENELEC EN 50013
Short-circuit protection		10 A cartridge fuse type gG (gI)
Cabling		Screw clamp terminals. Clamping capacity, min. : 1 x 1 mm^2, max. : 2 x 2.5 mm^2
Electrical durability		a.c. supply 50/60 Hz, Ith = 10 A Inductive circuit, utilisation category AC-15, 3 A/240 V : 1 million operating cycles

Electromechanical pressure switches

For control circuits, type XMX
Sizes 6 to 25 bar (87 to 362.5 psi). Adjustable differential, for regulation between 2 thresholds. Switches with 1 C/O single-pole contact

Accessories : page 3/4
Dimensions : page 3/5

References, characteristics

Pressure switches type XMX (internal setting screw)

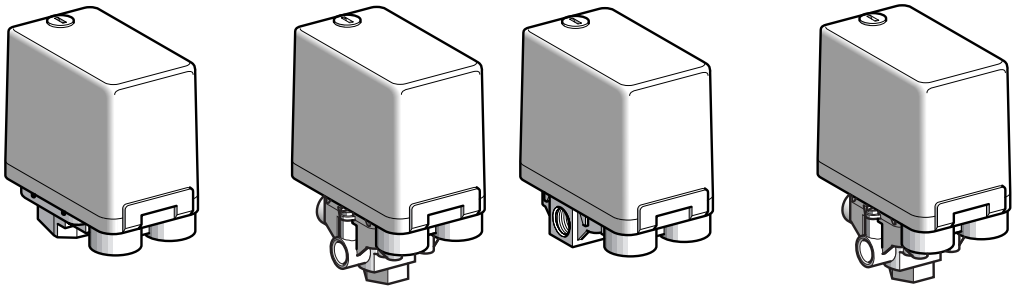

3

Adjustable range of switching point (PH) (Rising pressure)	**1…6 bar (14.5…87 psi)**	**1.3…12 bar (18.85…174 psi)**	**3.5…25 bar (50.75…362.5 psi)**	**1…6 bar (14.5…87 psi)**	**1.3…12 bar (18.85…174 psi)**	**3.5…25 bar (50.75…362.5 psi)**
Fluid connection	1/4" BSP (female)			4 x 1/4" BSP (female)		

References

Switches with black opaque cover

Fluids controlled : air, fresh water, sea water, from 0 °C to + 70 °C (1)	**XMX-A06L2135**	**XMX-A12L2135**	**XMX-A25L2135**	**XMX-A06L2435**	**XMX-A12L2435**	**XMX-A25L2435**
Weight (kg)	0.430	0.430	0.650	0.430	0.430	0.650

Complementary characteristics not shown under general characteristics (page 3/1)

Possible differential (subtract from PH to give PB)	Min. at low setting	0.8 bar (11.6 psi)	1 bar (14.5 psi)	3.4 bar (49.3 psi)	0.8 bar (11.6 psi)	1 bar (14.5 psi)	3.4 bar (49.3 psi)
	Min. at high setting	1.2 bar (17.4 psi)	1.7 bar (24.6 psi)	4.5 bar (65.2 psi)	1.2 bar (17.4 psi)	1.7 bar (24.6 psi)	4.5 bar (65.2 psi)
	Max. at high setting	4.2 bar (60.9 psi)	8.4 bar (121.8 psi)	20 bar (290 psi)	4.2 bar (60.9 psi)	8.4 bar (121.8 psi)	20 bar (290 psi)
Maximum permissible pressure	Per cycle	7.5 bar (108.7 psi)	15 bar (217.5 psi)	31.25 bar (453.1 psi)	7.5 bar (108.7 psi)	15 bar (217.5 psi)	31.25 bar (453.1 psi)
	Occasional surge	13.5 bar (195.7 psi)	27 bar (391.5 psi)	56.25 bar (815.6 psi)	13.5 bar (195.7 psi)	27 bar (391.5 psi)	56.25 bar (815.6 psi)
Destruction pressure		30 bar (435 psi)	30 bar (435 psi)	100 bar (1450 psi)	30 bar (435 psi)	30 bar (435 psi)	100 bar (1450 psi)
Mechanical durability		1 x 10^6 operating cycles					
Cable entry		2 entries tapped for Pg 13.5 cable gland					
Pressure switch type		Diaphragm					

Operating curves

XMX-A06●●●●●

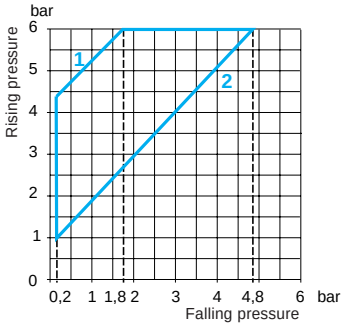

XMX-A12●●●●●

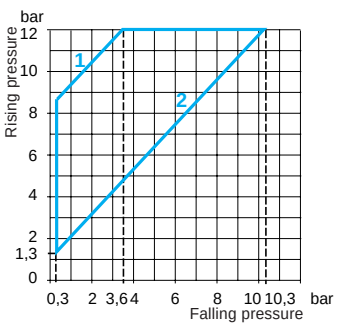

XMX-A25●●●●●

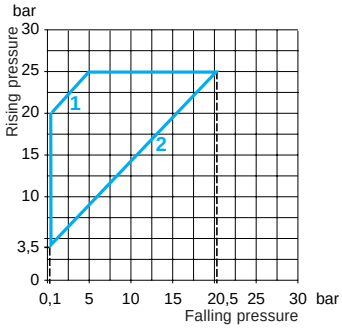

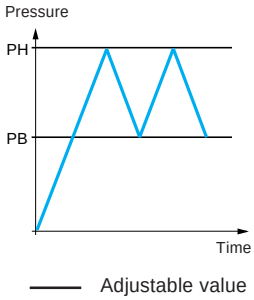

Connections

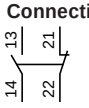

1 Maximum differential
2 Minimum differential

1 Maximum differential
2 Minimum differential

1 Maximum differential
2 Minimum differential

(1) See “Component materials of switch in contact with the fluid”, page 3/1.

Other versions

Pressure switches with alternative tapped cable entries : ISO, NPT, etc.
Please call our Customer information centre on 0870 6088608.

Electromechanical pressure switches

For control circuits, type XMA
Sizes 6 to 25 bar (87 to 362.5 psi). Adjustable differential, for regulation between 2 thresholds. Switches with 1 C/O single-pole contact

Accessories : page 3/4
Dimensions : page 3/5

References, characteristics

Pressure switches type XMA (external setting screw)

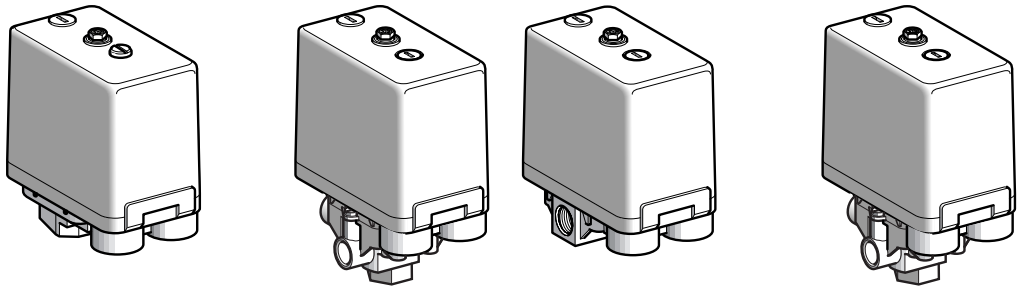

Adjustable range of switching point (PH) (Rising pressure)	**1…6 bar (14.5…87 psi)**	**1.3…12 bar (18.85…174 psi)**	**3.5…25 bar (50.75…362.5 psi)**	**1…6 bar (14.5…87 psi)**	**1.3…12 bar (18.85…174 psi)**	**3.5…25 bar (50.75…362.5 psi)**
Fluid connection	1/4" BSP (female)			4 x 1/4" BSP (female)		

References

Switches with black opaque cover						
Fluids controlled : air, fresh water, sea water, from 0 °C to + 70 °C	**XMA-H06L2135**	**XMA-H12L2135**	**XMA-H25L2135**	**XMA-H06L2435**	**XMA-H12L2435**	**XMA-H25L2435**
Switches with transparent cover						
Fluids controlled : air, fresh water, sea water, from 0 °C to + 70 °C	**XMA-V06L2135**	**XMA-V12L2135**	**XMA-V25L2135**	**XMA-V06L2435**	**XMA-V12L2435**	**XMA-V25L2435**
Weight (kg)	0.430	0.430	0.650	0.430	0.430	0.650

Complementary characteristics not shown under general characteristics (page 3/1)

Possible differential (subtract from PH to give PB)	Min. at low setting	0.8 bar (11.6 psi)	1 bar (14.5 psi)	3.4 bar (49.3 psi)	0.8 bar (11.6 psi)	1 bar (14.5 psi)	3.4 bar (49.3 psi)
	Min. at high setting	1.2 bar (17.4 psi)	1.7 bar (24.6 psi)	4.5 bar (65.2 psi)	1.2 bar (17.4 psi)	1.7 bar (24.6 psi)	4.5 bar (65.2 psi)
	Max. at high setting	4.2 bar (60.9 psi)	8.4 bar (121.8 psi)	20 bar (290 psi)	4.2 bar (60.9 psi)	8.4 bar (121.8 psi)	20 bar (290 psi)
Maximum permissible pressure	Per cycle	7.5 bar (108.7 psi)	15 bar (217.5 psi)	31.25 bar (453.1 psi)	7.5 bar (108.7 psi)	15 bar (217.5 psi)	31.25 bar (453.1 psi)
	Occasional surge	13.5 bar (195.7 psi)	27 bar (391.5 psi)	56.25 bar (815.6 psi)	13.5 bar (195.7 psi)	27 bar (391.5 psi)	56.25 bar (815.6 psi)
Destruction pressure		30 bar (435 psi)	30 bar (435 psi)	100 bar (1450 psi)	30 bar (435 psi)	30 bar (435 psi)	100 bar (1450 psi)
Mechanical durability		1 x 10^6 operating cycles					
Cable entry		2 entries tapped for Pg 13.5 cable gland					
Pressure switch type		Diaphragm					

Operating curves

XMA-●06●●●●●

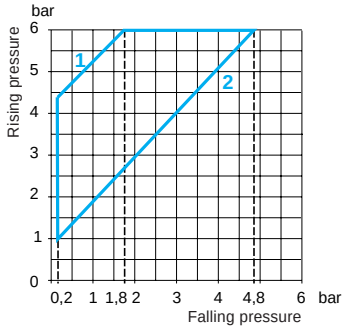

1 Maximum differential
2 Minimum differential

XMA-●12●●●●●

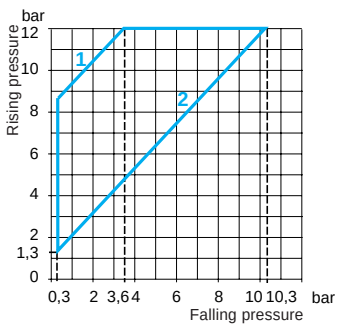

1 Maximum differential
2 Minimum differential

XMA-●25●●●●●

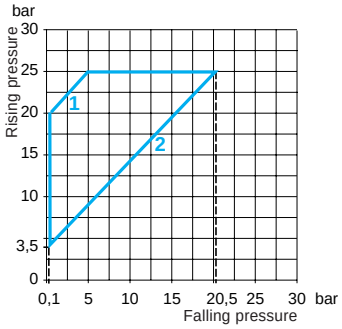

1 Maximum differential
2 Minimum differential

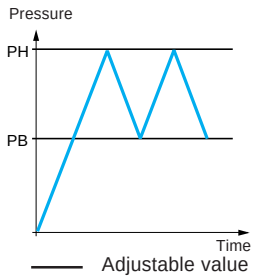

Connections



(1) See “Component materials of switch in contact with the fluid”, page 3/1.

Other versions

Pressure switches with alternative tapped cable entries : ISO, NPT, etc.
Please call our Customer information centre on 0870 6088608.

For control circuits, types XMX and XMA
Accessories and replacement parts

References

Dimensions :
page 3/5

	Description		Reference	Weight kg
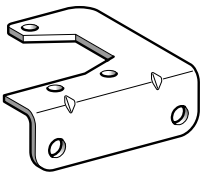 XMA-ZL001	**Fixing bracket**		**XMA-ZL001**	0.035
 XML-ZL003	**Knurled adjustment knob, Ø 36 mm** fits over adjustment screws to facilitate setting		**XML-ZL003**	0.010
 DE9-PM1201	**Pg 13.5 plastic cable gland**	With anti pull-out ring (for cable Ø 6…9 mm)	**DE9-PM1201**	0.005
		Without anti pull-out ring (for cable Ø 6…9 mm)	**DE9-PM1202**	0.005
		With anti pull-out ring (for cable Ø 9…12.5 mm)	**DE9-PM1203**	0.005
 DE9-PM1202		Without anti pull-out ring (for cable Ø 9…12.5 mm)	**DE9-PM1204**	0.005

	Description	For pressure switch	Reference	Weight kg
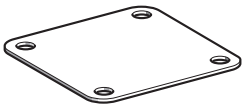 XMP-Z3●	**Diaphragms**	Size 6 bar	**XMP-Z31**	0.005
		Size 12 bar	**XMP-Z32**	0.005
		Size 25 bar	**XMP-Z33**	0.005

For control circuits, types XMX and XMA

Dimensions

Characteristics :
page 3/1
References :
pages 3/2 and 3/3

XMX-A06L2135, XMX-A12L2135
XMA-●06L2135, XMA-●12L2135

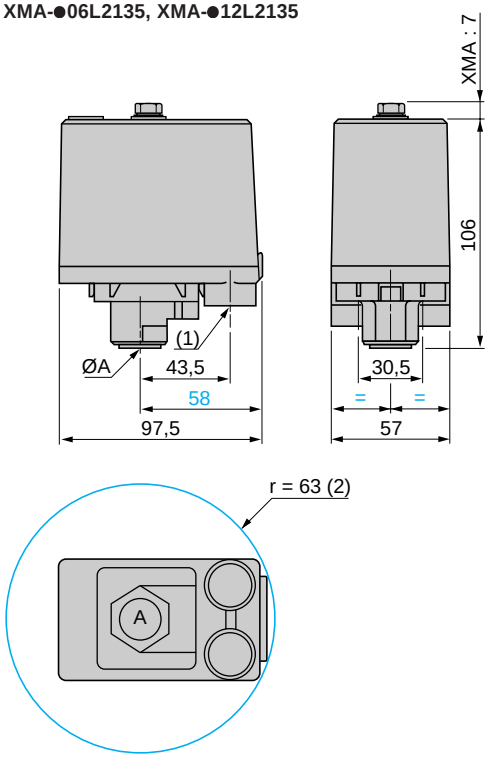

ØA = 1/4" BSP (female)
(1) 2 tapped entries for Pg 13.5 cable gland
(2) Minimum clearance zone for screwing-on pressure switch at point A

XMX-A06L2435, XMX-A12L2435
XMA-●06L2435, XMA-●12L2435

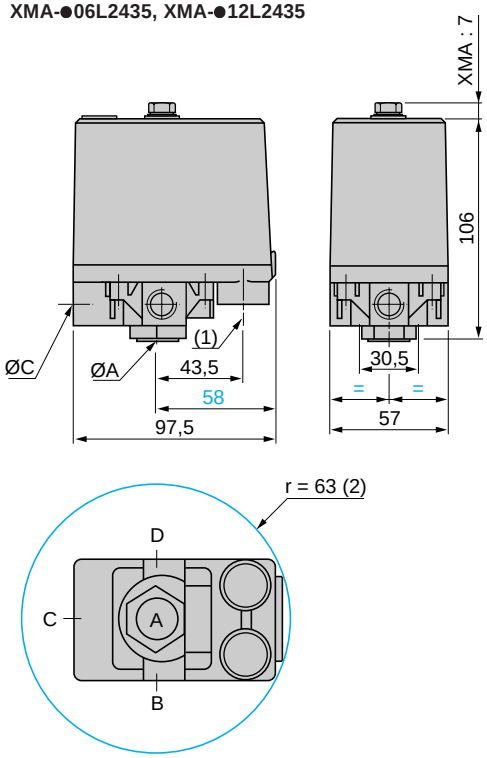

ØA = ØB = ØC = ØD = 1/4" BSP (female)
(1) 2 tapped entries for Pg 13.5 cable gland
(2) Minimum clearance zone for screwing-on pressure switch at point A

XMX-A25L2135, XMX-A25L2435
XMA-●25L2135, XMA-●25L2435

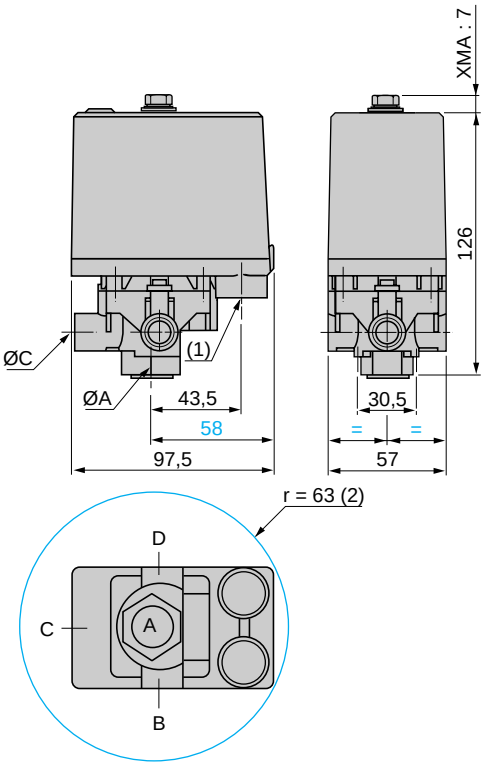

XM●-●25L2135 : ØA only = 1/4" BSP (female)
XM●-●25L2435 : ØA = ØB = ØC = ØD = 1/4" BSP (female)
(1) 2 tapped entries for Pg 13.5 cable gland
(2) Minimum clearance zone for screwing-on pressure switch at point A

Fixing bracket
XMA-ZL001

