Sensors, Series SM6

R412010144

General series information
AVENTICS Series SM6 Distance measuring sensors

- The AVENTICS Series SM6 are analog distance measuring sensors, which ensure a continuous detection of the piston movements in measuring ranges from 32 mm up to 256 mm. A control element on the sensor allows for setting of the zero point and variable selection of the distance measurement range. The compact sensors are also easy to mount – either directly in the cylinder slot or to the profile using clamp mountings.

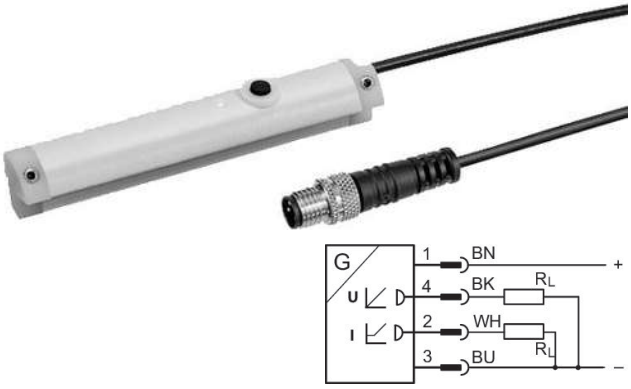

Technical data

Industry	Industrial
Direct mounting for series	PRA PRE CCI KPZ SSI GPC CVI
Indirect mounting for series	TRB ITS 167 MNI ICM TRR
Slot width	6 mm groove
Electrical connection	Plug
Cable	with cable
Cable length	0.3 m
Quiescent current (without load)	< 25 mA
Repetitive precision max. measuring range	0.1 mm
Output signal	0 - 10 V DC, 4 - 20 mA
sampling interval	1 ms
Certificates	cULus
Protection class	IP67
Min. ambient temperature	-20 °C

Max. ambient temperature	70 °C
max. measuring range	64 mm
LED status display	Yellow
Max. measuring range resolution	0,05 mm
Linearity deviation	0,3 mm
Sampling speed	3 m/s
Shock resistance	30 g / 11 ms
Vibration resistance	10 - 55 Hz, 1 mm
Display	LED

Material

Housing material	Polyamide fiber-glass reinforced
Part No.	R412010144

Technical information

The pressure dew point must be at least 15 °C less than ambient and medium temperature and may not exceed 3 °C.

The oil content of compressed air must remain constant during the life cycle.

Use only the approved oils from AVENTICS. Further information can be found in the “Technical information” document (available in https://www.emerson.com/en-us/support).

Dimensions

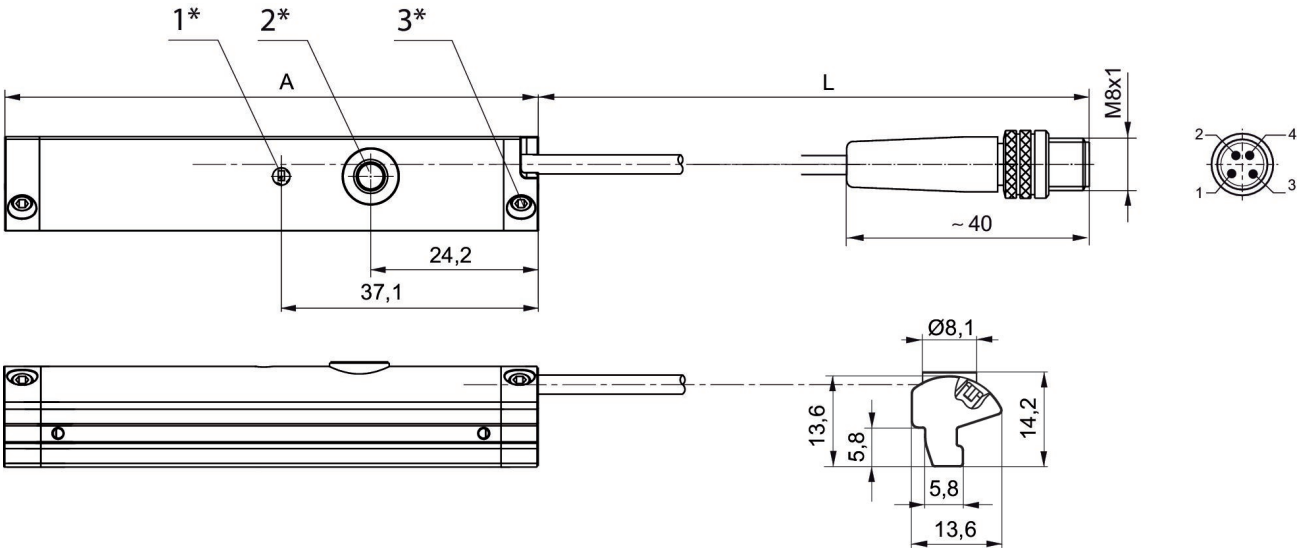

1* = LED 2* = teach button 3* = threaded pin M3x11
L = cable length
Pin assignment: 1 = (+), 2 = (OUT 1) 3 = (GND), 4 = (OUT 2), EN 60947-5-7
A = sensor length