COMUS Group

COMUS International

# Part Number: AU2402-6
# Movement / Vibration Sensor
# Product Data Sheet

## PICTURE



✔RoHS Compliant

## OPERATION

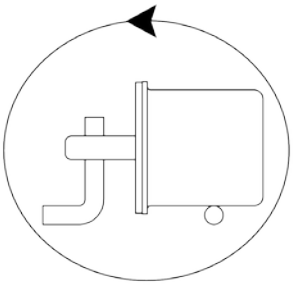

Non-Position Sensitive
Motion Sensor

## FEATURES

- Resistant to Ambient Environmental Conditions
- Case Material : Gold Plated
- Mechanical Stress Resistant
- Antivibration Feature
- Hermetically Sealed & Inert Gas Filled

## DIMENSIONS

Drawings not to scale.
All dimensions in inches (mm) nominal.

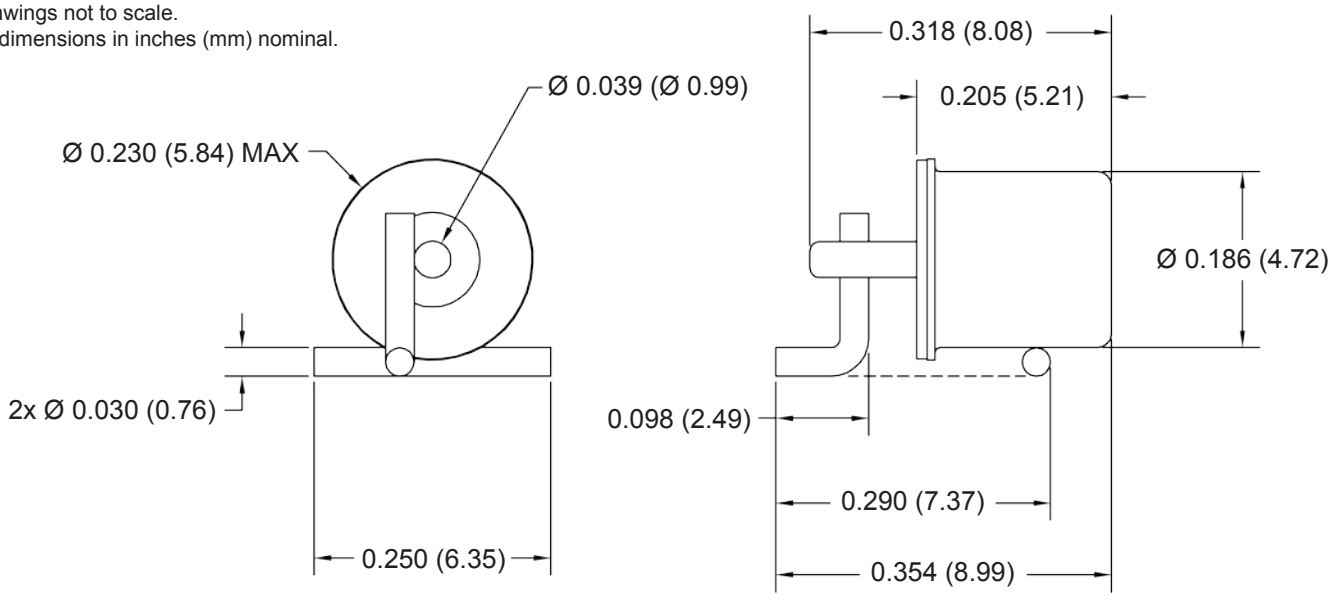


## SPECIFICATION

| | |
|---|---|
| Contact Capacity | 5VA MAX |
| Contact Resistance | 100 Ohms |
| Operating Temperature | -37˚ +100˚C |

As part of the company policy of continued product improvement, specifications may change without notice. Our sales office will be pleased to help you with the latest information on this product range and the details of our full design and manufacturing service. All products are supplied to our standard conditions of sale unless otherwise agreed in writing.

**Phone: (1) 973 777 6900** **www.comus-intl.com** **Fax: (1) 973 777 8405**

Belgium: + 32 (0)12 390400 - Assemtech, UK: +44 (0) 1255 862236 - Germany: +49 (0)911 923 15 943

©2011 Copyright Comus International, 454 Allwood Road, Clifton NJ 07012, USA

An ISO 9001 Certified Company