Miniature Pushbutton Switches heavy duty series

Specifications:

Contact rating:	250 V AC, 3 A / 125 V AC, 6 A 30 V DC, 4 A / 12 V DC, 5 A 6 V DC, 6 A
Contact resistance:	< 10 mΩ
Insulation resistance:	> 1000 MΩ at 500 V DC
Dielectric strength:	1500 V, 50 Hz for the duration of 1 minute
Operating temperature:	– 45° to +140° C
Mechanical life:	minimum 30 000 operations
Contacts:	coin silver (common contact copper alloy, silver-plated) also available gold-plated, version B and G (see page 4)
Terminals:	solder tags, copper alloy silver-plated further terminal versions see page 8
Material:	case: diallyl-phthalate meets UL 94 V–0, black metal parts: nickel-plated
Mounting:	bushing 15/32-32 THD (M 12 x 0,75), key 14 mm
Soldering conditions:	hand-soldering – max.: 60 W, 3 sec, 420° C auto-soldering – max.: 5 sec, 270° C

3

Accessories:

Plastic caps (height 3,5 mm) ∅

black	9 mm	CB 505
green	9 mm	CB 506
yellow	9 mm	CB 508
red	9 mm	CB 509



Waterproof sealing caps (height 14,8 mm)

grey	ET 207
red	ET 209

also available in fluoro silicone material



Models: Switching functions

S P D T

MPG 106 F * on – mom
MPG 106 D on – on

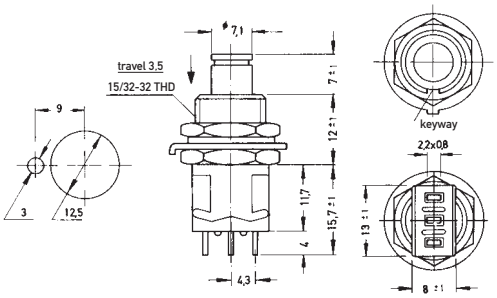



D P D T

MPG 206 R * on – mom
MPG 206 N on – on

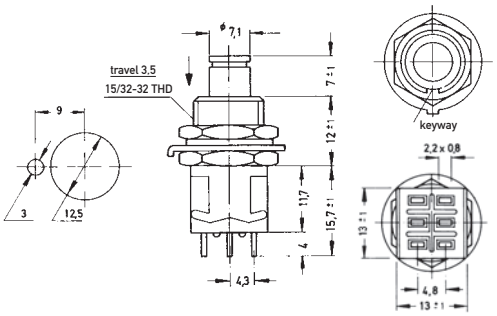



3 P D T

MPG 306 F * on – mom
MPG 306 D on – on

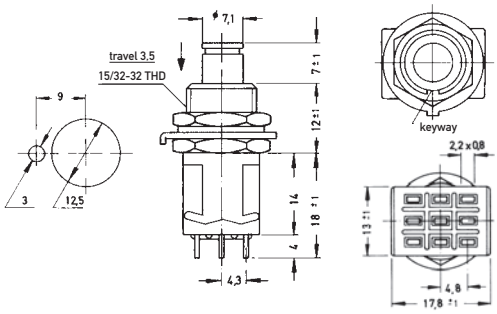



4 P D T

MPG 406 R * on – mom
MPG 406 N on – on

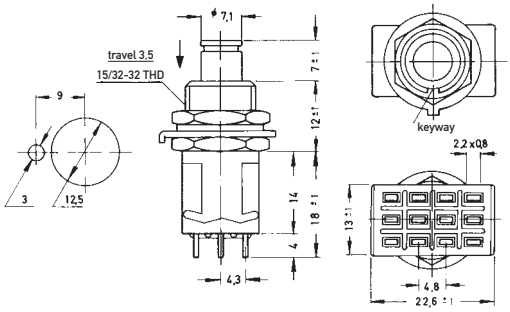



* When looking at the brand name the normally closed contact is on the right-hand side.