# E-BOX M12, 2 illuminated pushbuttons FLEXLAB, frontring metallic silver, 2 NO



### fields of application

- Measurement-control-regulation
- Mechanical and system engineering
- Construction machinery
- Industrial robots
- Model construction
- Home technology

### special features

- Compact dimensions: 109 x 40 x 27 mm
- Various actuator-indicator combinations from the RAFIX 22 FS+ control unit series
- With yellow upper part of housing for combinations with emergency stop actuator
- With gray upper part of housing for pushbutton combinations
- Mounting with time-saving single-hole screw mounting technology, particularly suitable for aluminum profile rails or alternatively direct mounting with M4 screws
- Connection with M12 plug: "Plug and Play

## description

The E-Box M12 is a ready-to-connect, completely equipped housing including actuator and switching elements. Thus, for example, emergency stop, on/off and up/down functions, also with additional status displays, can be implemented with the very compact dimensions of the E-Box.The assembly: Screw on the clip, put on the box, connect the plug, check and ready. The E-Box M12 can be used wherever individual command device units are required at decentralized locations. Typically, for example, for emergency stop applications along a production facility or at the safety fence. The dimensions of the E-Box M12 are based on the edge dimensions of a 40 mm profile rail and the mounting concept is also designed for this.

## technical data

**general**

| | |
|---|---|
| Actuator position 1 | FLEXLAB illuminated pushbutton |
| Actuator position 2 | FLEXLAB illuminated pushbutton |
| Color | light gray |
| Collar color | dark gray |
| Front ring color | metallic silver |
| Luminous element color | white |
| Collar shape | round |
| Operating temperature, min. | -25 °C |
| Operating temperature, max. | 70 °C |
| Storage temperature, min. | -40 °C |
| Storage temperature, max. | 80 °C |
| illuminated | Yes |
| Luminous elements | LED |

### direct links

- RAFI eCatalog

The information in this data sheet only contains general descriptions and / or performance features, which may not apply precisely as described to the respective application, and which my change due to further product enhancements. The technical data, illustrations and other information about our products are the mere results of individual technical testing. These descriptions and other product features are only binding if they expressly agreed upon at the time of the conclusion of a binding contract. In all other cases, we reserve the right to make technical changes as well as changes of availability. Pictures and other graphic illustrations are approximations only. All product names may be trademarks or brand names of the RAFI Group or any other sub-supplier of RAFI. The use of such by any third parties for their own purposes may infringe the rights of the respective entity holding those rights.


**RAFI GmbH & Co. KG**

Ravensburger Str. 128-134
88276 Berg / Ravensburg
Germany
www.rafi-group.com,
info.headquarters@rafi-group.com

| | |
|---|---|
| Packaging | Box |
| Packaging unit | 1 pcs. |
| net weight | 105.6 g |
| Operating life electrical | 1.000.000 (10mA / 24V DC) cycles |
| B10 electrical | 1.300.000 (10mA / 24V DC) cycles |
| Degree of protection, front side, according to DIN EN 60529 | IP65 |
| Degree of protection, rear side, according to DIN EN 60529 | IP65 |
| Protection class | II |
| MOQ order | 5 pcs. |
| RoHS compliant | Yes |
| REACH compliant | Yes |

**mounting diameters**

| | |
|---|---|
| Outside dimension, length | 123.2 mm |
| Outside dimension, width | 40 mm |
| Outside dimension, height | 35.6 mm |

**mechanical data**

| | |
|---|---|
| Contact function | 2 NO |
| Contact material | Gold |
| Fixing | Assembly clip |
| Terminal on the rear | M12 8-pin A-coded |
| PIN 1 | Normally open contact 1 |
| PIN 2 | Normally open contact 1 |
| PIN 3 | Normally open contact 2 |
| PIN 4 | Normally open contact 2 |
| PIN 6 | GND |
| PIN 5 | LED + |
| PIN 7 | LED + |
| PIN 8 | GND |

**electrical data**

| | |
|---|---|
| Operating voltage of the luminous element, max. | 24 V |
| Rated voltage, min. | 5 V |
| Rated voltage, max. | 35 V |
| Voltage type | AC / DC |
| Rated operating voltage | 5-35 V |
| Rated current, min. | 0.001 A |
| Rated current, max. | 0.1 A |
| Rated power, max. | 0.25 W |
| Power loss | 0.30030 W |

The information in this data sheet only contains general descriptions and / or performance features, which may not apply precisely as described to the respective application, and which my change due to further product enhancements. The technical data, illustrations and other information about our products are the mere results of individual technical testing. These descriptions and other product features are only binding if they expressly agreed upon at the time of the conclusion of a binding contract. In all other cases, we reserve the right to make technical changes as well as changes of availability. Pictures and other graphic illustrations are approximations only. All product names may be trademarks or brand names of the RAFI Group or any other sub-supplier of RAFI. The use of such by any third parties for their own purposes may infringe the rights of the respective entity holding those rights.


**RAFI GmbH & Co. KG**

Ravensburger Str. 128-134
88276 Berg / Ravensburg
Germany
www.rafi-group.com,
info.headquarters@rafi-group.com

## drawings

### Dimensioned drawing

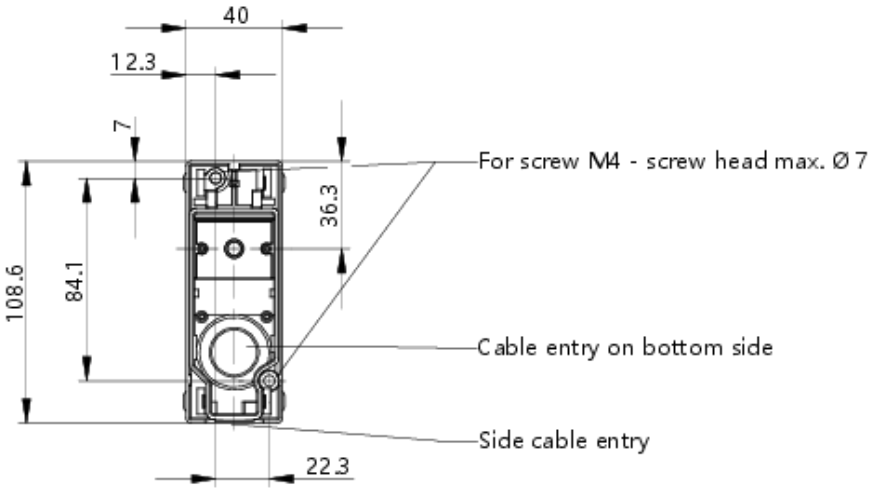


### System drawing

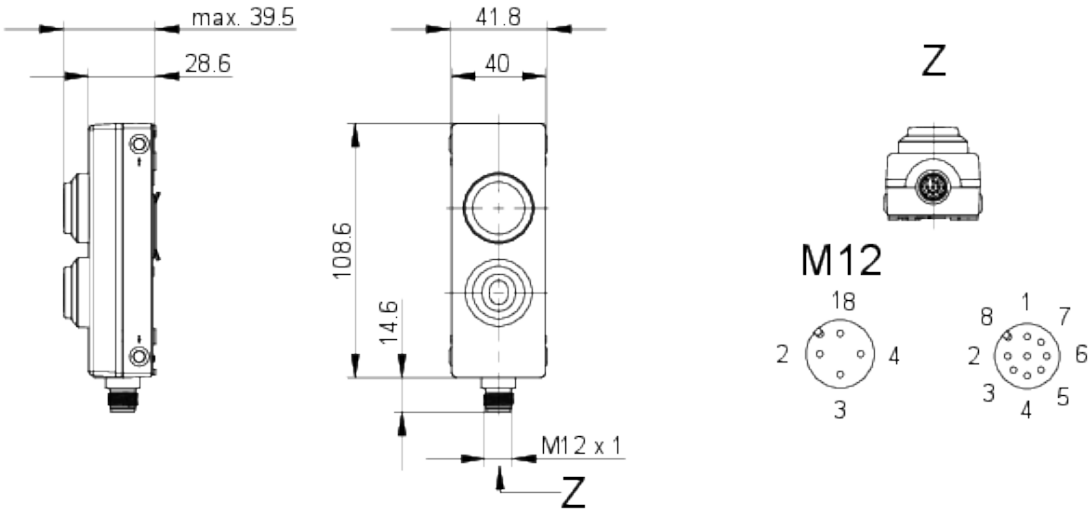


The information in this data sheet only contains general descriptions and / or performance features, which may not apply precisely as described to the respective application, and which my change due to further product enhancements. The technical data, illustrations and other information about our products are the mere results of individual technical testing. These descriptions and other product features are only binding if they expressly agreed upon at the time of the conclusion of a binding contract. In all other cases, we reserve the right to make technical changes as well as changes of availability. Pictures and other graphic illustrations are approximations only. All product names may be trademarks or brand names of the RAFI Group or any other sub-supplier of RAFI. The use of such by any third parties for their own purposes may infringe the rights of the respective entity holding those rights.


**RAFI GmbH & Co. KG**

Ravensburger Str. 128-134
88276 Berg / Ravensburg
Germany
www.rafi-group.com,
info.headquarters@rafi-group.com

## Schematic diagram

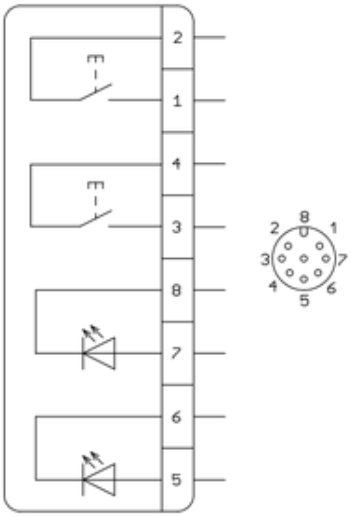


The information in this data sheet only contains general descriptions and / or performance features, which may not apply precisely as described to the respective application, and which my change due to further product enhancements. The technical data, illustrations and other information about our products are the mere results of individual technical testing. These descriptions and other product features are only binding if they expressly agreed upon at the time of the conclusion of a binding contract. In all other cases, we reserve the right to make technical changes as well as changes of availability. Pictures and other graphic illustrations are approximations only. All product names may be trademarks or brand names of the RAFI Group or any other sub-supplier of RAFI. The use of such by any third parties for their own purposes may infringe the rights of the respective entity holding those rights.


**RAFI GmbH & Co. KG**

Ravensburger Str. 128-134
88276 Berg / Ravensburg
Germany
www.rafi-group.com,
info.headquarters@rafi-group.com