X67DC1198

1 General information

1.1 Other applicable documents

For additional and supplementary information, see the following documents.

Other applicable documents

Document name	Title
MAX67	X67 System user's manual
MAEMV	Installation / EMC guide

1.2 Order data

Order number	Short description	Figure
	Multi-function	
X67DC1198	X67 digital counter module, 2x 3 inputs 5 V for SSI 1 Mbit/s or ABR 250 kHz, 8 digital channels 24 VDC, 0.1 A, configurable as inputs or outputs, 4 AB counters 100 kHz, 4x comparator outputs or 2x PWM outputs, local time measurement functions	

Table 1: X67DC1198 - Order data

Required accessories
For a general overview, see section "Accessories - General overview" in the X67 System user's manual.

1.3 Module description

This module is a multifunctional counter module. It offers the option of connecting 2 SSI encoders, 2 ABR encoders, 4 AB encoders or 14 event counters. 2 outputs are available for pulse width modulation. The functions can also be mixed.

Functions:

- Digital inputs and outputs
- Counters and encoders
- SSI encoder interface
- PWM - Pulse width modulation
- Time measurement
- Controlling the LED status indicators
- Monitoring the encoder power supply

Digital inputs and outputs

This module is equipped with 14 digital channels that are configurable as inputs or outputs. The inputs can be compared with predefined states and used to generate events. In addition to being controlled from the application, the setting or clearing of outputs can also be controlled by events.

Counter functions

The module is equipped with 8 internal counter functions with 2 counter registers each. The counter registers apply different functions depending on the selected linkage of the event functions. The following configurations are possible:

- AB counter
- Up/Down counter
- Event counter

SSI absolute encoder

The module provides 2 SSI absolute encoders that are directly supported by the hardware.

PWM functions

The module provides 2 PWM functions that are directly supported by the hardware.

Time measurement function

The module has a time measurement function for each I/O channel. It can be configured separately for rising and falling edges on each channel.

Controlling LED status indicators

The module LED status indicators can be controlled by the application. This allows blink signals to be output or the states of physical inputs and outputs to be displayed.

Monitoring the supply voltage

The encoder power supply voltage is monitored.

2 Technical description

2.1 Technical data

Order number	X67DC1198
Short description	
I/O module	2 SSI absolute encoders 5 V or 2 ABR incremental encoders 5 V, 4 AB counters or 4 up/down counters 24 V, 2x pulse width modulation, time measurement, relative timestamp
General information	
Insulation voltage between encoder and bus	500 V_{eff}
B&R ID code	0x18D0
Sensor/Actuator power supply	0.5 A summation current
Status indicators	I/O function per channel, supply voltage, bus function
Diagnostics	
Outputs	Yes, using LED status indicator and software
I/O power supply	Yes, using LED status indicator and software
Connection type	
X2X Link	M12, B-coded
Inputs/Outputs	2x M12, 5-pin, A-coded
SSI/ABR encoder	2x M12, 12-pin, A-coded
I/O power supply	M8, 4-pin
Power consumption	
Internal I/O	2.8 W
X2X Link power supply	0.75 W
Certifications	
CE	Yes
UKCA	Yes
ATEX	Zone 2, II 3G Ex nA IIA T5 Gc IP67, Ta = 0 - Max. 60°C TÜV 05 ATEX 7201X
UL	cULus E115267 Industrial control equipment
HazLoc	cCSAus 244665 Process control equipment for hazardous locations Class I, Division 2, Groups ABCD, T5
EAC	Yes
KC	Yes
I/O power supply	
Nominal voltage	24 VDC
Voltage range	18 to 30 VDC
Integrated protection	Reverse polarity protection
Power consumption	
Sensor/Actuator power supply	Max. 12 W [1)]
Sensor/Actuator power supply	
Voltage	I/O power supply minus voltage drop for short-circuit protection
Voltage drop for short-circuit protection at 0.5 A	Max. 2 VDC
Summation current	Max. 0.5 A
Short-circuit proof	Yes
SSI absolute encoder	
Quantity	2
Encoder inputs	5 V, symmetrical
Counter size	32-bit
Max. transfer rate	1 Mbit/s
Coding	Gray/Binary
Overload characteristics of encoder power supply	Short-circuit proof, overload-proof
Transfer rate	125 kbit/s, 250 kbit/s, 500 kbit/s, 1 Mbit/s
Encoder power supply	
5 VDC	Module-internal, max. 0.3 A summation current
24 VDC	Module-internal, max. 0.5 A summation current
ABR incremental encoder	
Quantity	2
Encoder inputs	5 V, symmetrical
Counter size	16/32-bit
Input frequency	Max. 250 kHz
Evaluation	4x
Encoder power supply	
5 VDC	Module-internal, max. 0.3 A summation current
24 VDC	Module-internal, max. 0.5 A summation current
Input filter	
Hardware	≤200 ns
Software	-
Common-mode range	-7 V ≤ V_{CM} ≤ +12 V

Table 2: X67DC1198 - Technical data

Order number	X67DC1198
Overload characteristics of encoder power supply	Short-circuit proof, overload-proof
AB counters	
Quantity	4
Evaluation	4x
Input frequency	Max. 100 kHz
Encoder inputs	24 V, asymmetrical
Encoder power supply 24 VDC	Module-internal, max. 0.5 A summation current
Counter size	16/32-bit
Digital inputs 5 VDC	
Quantity	Up to 6, configuration as input or output using software
Nominal voltage	5 VDC differential signal, EiA RS485 standard
Input characteristics per EN 61131-2	Type 1
Input filter	
Hardware	200 ns
Software	-
Additional functions	ABR incremental encoder, SSI absolute encoder, event counting, time measurement, relative timestamp
Digital inputs 24 VDC	
Quantity	Up to 8, configuration as input or output using software
Nominal voltage	24 VDC
Input characteristics per EN 61131-2	Type 1
Input circuit	Sink
Input voltage	18 to 30 VDC
Input filter	
Hardware	≤2 µs
Software	-
Input current at 24 VDC	Approx. 3.3 mA
Input resistance	7.31 kΩ
Switching threshold	
Low	<5 VDC
High	>15 VDC
Additional functions	Reference enable inputs for ABR, event counting, latch function, time measurement, relative timestamp
Event counters	
Quantity	8
Evaluation	2x
Input frequency	Max. 100 kHz
Encoder inputs	24 V, asymmetrical
Encoder power supply 24 VDC	Module-internal, max. 0.5 A summation current
Counter size	16/32-bit
Up/Down counters	
Quantity	4
Evaluation	2x
Input frequency	Max. 100 kHz
Encoder inputs	24 V, asymmetrical
Encoder power supply 24 VDC	Module-internal, max. 0.5 A summation current
Counter size	16/32-bit
Edge detection / Time measurement	
Possible measurements	Gate time, period duration, edge offset for various channels
Measurements per module	Up to 9
Measurements per channel	Up to 2
Counter size	16-bit
Counter frequency	
Internal	8 MHz, 4 MHz, 2 MHz, 1 MHz, 500 kHz, 250 kHz, 125 kHz, 62.5 kHz
Signal form	Square wave pulse
Measurement type	Continuous or triggered
Digital outputs 5 VDC	
Quantity	Up to 6, configuration as input or output using software
Type	5 VDC differential signal, EiA RS485 standard
Output circuit	Sink or source
Output protection	Short circuit protection
Variant	Push / Pull / Push-Pull
Diagnostic status	Output monitoring
Digital outputs 24 VDC	
Quantity	Up to 8, configuration as input or output using software
Nominal voltage	24 VDC
Nominal output current	0.1 A
Total nominal current	0.8 A
Variant	Push / Pull / Push-Pull
Output circuit	Sink or source
Output protection	Thermal shutdown in the event of overcurrent or short circuit, integrated protection for switching inductive loads, reverse polarity protection of the output power supply
Braking voltage when switching off inductive loads	Switching voltage + 0.6 VDC
Diagnostic status	Output monitoring

Table 2: X67DC1198 - Technical data

Order number	X67DC1198
Switch-on in the event of overload shutdown or short-circuit shutdown	Approx. 10 ms (depends on the module temperature)
Peak short-circuit current	<10 A
Leakage current when the output is switched off	Max. 25 µA
Residual voltage	<0.9 V at 0.1 A nominal current
Switching voltage	I/O power supply minus residual voltage
Pulse width modulation [2]	
Period duration	41.6 µs to 500 ms
Pulse duration	0 to 100%
Resolution	0.1%
Switching frequency	
Resistive load	Max. 24 kHz
Switching delay	
0 → 1	<2 µs
1 → 0	<2 µs
Additional functions	Pulse width modulation, comparator function
Electrical properties	
Electrical isolation	Bus isolated from encoder and channel Channel not isolated from channel and encoder Encoder not isolated from encoder
Operating conditions	
Mounting orientation	
Any	Yes
Installation elevation above sea level	
0 to 2000 m	No limitation
>2000 m	Reduction of ambient temperature by 0.5°C per 100 m
Degree of protection per EN 60529	IP67
Ambient conditions	
Temperature	
Operation	-25 to 60°C
Derating	-
Storage	-40 to 85°C
Transport	-40 to 85°C
Mechanical properties	
Dimensions	
Width	53 mm
Height	85 mm
Depth	42 mm
Weight	200 g
Torque for connections	
M8	Max. 0.4 Nm
M12	Max. 0.6 Nm

Table 2: X67DC1198 - Technical data

1) The power consumption of the sensors and actuators connected to the module is not permitted to exceed 12 W.
2) Dead time when switching between push and pull: Max. 1.5 µs.

2.2 LED status indicators

<table>
<tr><th>Figure</th><th>LED</th><th colspan="3">Description</th></tr>
<tr><td rowspan="15">
</td><td>Status indicator 1</td><td colspan="3">Status indicator - X2X Link.</td></tr>
<tr><td></td><td>Green</td><td>Red</td><td>Description</td></tr>
<tr><td></td><td>Off</td><td>Off</td><td>No power supply via X2X Link</td></tr>
<tr><td></td><td>On</td><td>Off</td><td>X2X Link supplied, communication OK</td></tr>
<tr><td></td><td>Off</td><td>On</td><td>X2X Link supplied but X2X Link communication not functioning</td></tr>
<tr><td></td><td>On</td><td>On</td><td>PREOPERATIONAL: X2X Link supplied, module not initialized</td></tr>
<tr><td>1 - 4</td><td colspan="3">Status indicator for input/output 1 to 8</td></tr>
<tr><td></td><td colspan="2">LED</td><td>Description</td></tr>
<tr><td></td><td colspan="2">Orange</td><td>Output status of channel x</td></tr>
<tr><td></td><td colspan="2">Green</td><td>Input status of channel x</td></tr>
<tr><td></td><td colspan="2">Orange and green</td><td>One I/O channel is configured as an input and one as an output. Both channels are active. Both the orange and green LED are lit. Since only one light conductor is used, however, the color is mixed.</td></tr>
<tr><td>Status indicator 2</td><td colspan="3">Status indicator for module function.</td></tr>
<tr><td></td><td>LED</td><td>Status</td><td>Description</td></tr>
<tr><td></td><td rowspan="5">Green</td><td>Off</td><td>No power to module</td></tr>
<tr><td></td><td>Single flash</td><td>RESET mode</td></tr>
<tr><td></td><td>Blinking</td><td>PREOPERATIONAL mode</td></tr>
<tr><td></td><td>Double flash</td><td>BOOT mode (during firmware update)[1)]</td></tr>
<tr><td></td><td>On</td><td>RUN mode</td></tr>
<tr><td></td><td rowspan="4">Red</td><td>Off</td><td>No power to module or everything OK</td></tr>
<tr><td></td><td>On</td><td>Error or reset status</td></tr>
<tr><td></td><td>Single flash</td><td>Warning/Error on an I/O channel. Level monitoring for digital outputs has been triggered.</td></tr>
<tr><td></td><td>Double flash</td><td>Supply voltage not in the valid range</td></tr>
</table>

1) Depending on the configuration, a firmware update can take up to several minutes.

2.3 Connection elements



X2X Link
Connector A: Input
Connector B: Output

Connector 1: ABR incremental or SSI absolute encoder 1
Digital inputs/outputs 1 + 2 or AB counter 1
Connector 3: ABR incremental or SSI absolute encoder 2
Digital inputs/outputs 5 + 6 or AB counter 3

Digital inputs/outputs 3 + 4 or AB counter 2
Digital inputs/outputs 7 + 8 or AB counter 4

24 VDC I/O power supply
Connector C: Supply
Connector D: Pass through

2.3.1 X2X Link

The module is connected to the X2X Link network using pre-assembled cables. The connection is made using M12 circular connectors.

<table>
<tr><th>Connection</th><th colspan="2">Pinout</th></tr>
<tr><td rowspan="7">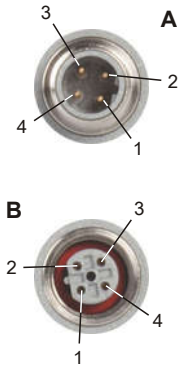
</td><td>Pin</td><td>Name</td></tr>
<tr><td>1</td><td>X2X+</td></tr>
<tr><td>2</td><td>X2X</td></tr>
<tr><td>3</td><td>X2X⊥</td></tr>
<tr><td>4</td><td>X2X\</td></tr>
<tr><td colspan="2">Shield connection made via threaded insert in the module.

A → B-coded (male), input
B → B-coded (female), output</td></tr>
</table>

2.3.2 Pinout

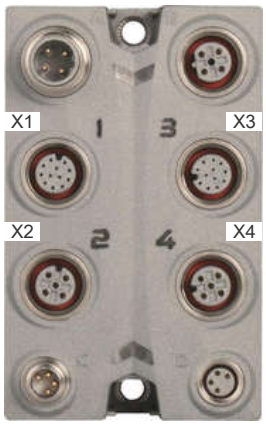

X1 and X3
M12 ①

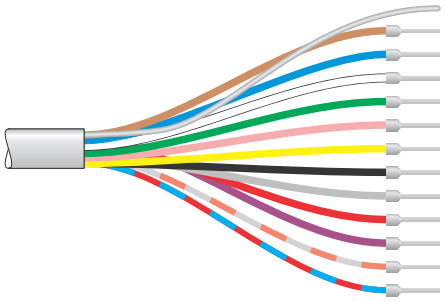

Shield		
1	ABR-B\;	DI/DO
2		DI/DO; AB-A
3	ABR-R; SSI clock;	DI/DO
4	ABR-R\; SSI clock\;	DI/DO
5	ABR-A; SSI data;	DI/DO
6	ABR-A\; SSI data\;	DI/DO
7		DI/DO; AB-B
8	ABR-B;	DI/DO
9	Reserved	
10	+5 VDC	
11	+24 VDC	
12	GND	

X2 and X4
M12 ②

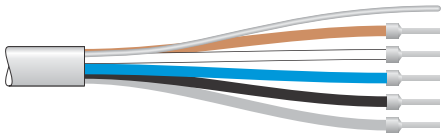

Shield	
1	+24 VDC
2	DI/DO; PWM; AB-A
3	GND
4	DI/DO; AB-B
5	Shield

① X67CA0I41.xxxx: Straight multi-function cable
X67CA0I51.xxxx: Angled multi-function cable
② X67CA0A41.xxxx: M12 straight sensor cable
X67CA0A51.xxxx: M12 angled sensor cable

2.3.2.1 Connector X1 and X3

4 pinouts are listed in the following table:

- I/O channels: Division of digital I/O channels (5 VDC differential signal and 24 VDC)
- ABR incremental encoder: Encoder operated as incremental encoder
- SSI absolute encoder: Encoder operated as SSI absolute encoder
- AB counters: 24 V inputs are operated as AB counters

M12, 12-pin	Pinout								
Connection 1	Pin	Assignment	Voltage		I/O channel		ABR encoders	SSI encoder	AB counters
			5 V	24 V	X1	X3	X1: Encoder 1 X3: Encoder 2	X1: Encoder 1 X3: Encoder 2	X1: Counter 1 X3: Counter 3
	1	Inputs/Outputs	●		10\	14\	B\	-	-
	2	Inputs/Outputs		●	1	5	-	-	A
	3	Inputs/Outputs	●		11	15	R	Clock	-
	4	Inputs/Outputs	●		11\	15\	R\	Clock\	-
	5	Inputs/Outputs	●		9	13	A	Data	-
	6	Inputs/Outputs	●		9\	13\	A\	Data\	-
	7	Inputs/Outputs		●	2	6	-	-	B
	8	Inputs/Outputs	●		10	14	B	-	-
	9	Reserved							
	10	+5 VDC encoder power supply							
	11	+24 VDC encoder power supply							
	12	GND							

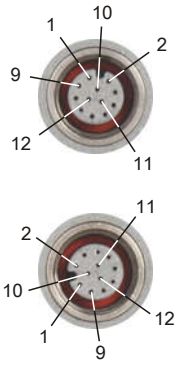

Connection 3

2.3.2.2 Connection X2 and X4

M12, 5-pin	Pinout					
Connection 2	Pin	Assignment	I/O channel		PWM		AB counters
			X2	X4	X2	X4	X2: Counter 2 X4: Counter 4
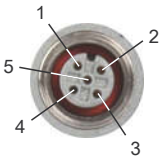	1	24 VDC sensor/actuator power supply[1]					
	2	Input/Output	3	7	PWM 1	PWM 2	A
	3	GND					
	4	Input/Output	4	8	-	-	B
	5	Shield[2]					
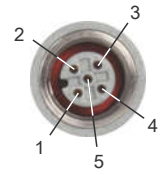	1) Sensors/Actuators are not permitted to be supplied externally. 2) Shielding also provided by threaded insert in the module. X2 and X4 → A-keyed (female), input						
Connection 4							

2.3.3 I/O power supply 24 VDC

The I/O power supply is connected via M8 connectors C and D. The I/O power supply is connected via connector C (male). Connector D (female) is used to route the I/O power supply to other modules.

Information:

The maximum permissible current for the I/O power supply is 8 A (4 A per connection pin)!

Connection	Pinout	
	Pin	Name
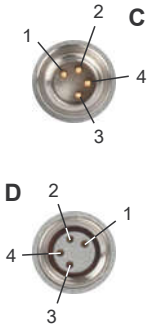	1	24 VDC
	2	24 VDC
	3	GND
	4	GND
	C → Connector (male) in module, supply for I/O power supply D → Connector (female) in module, routing of I/O power supply	

2.4 Connection examples

ABR encoder with 24 V power supply

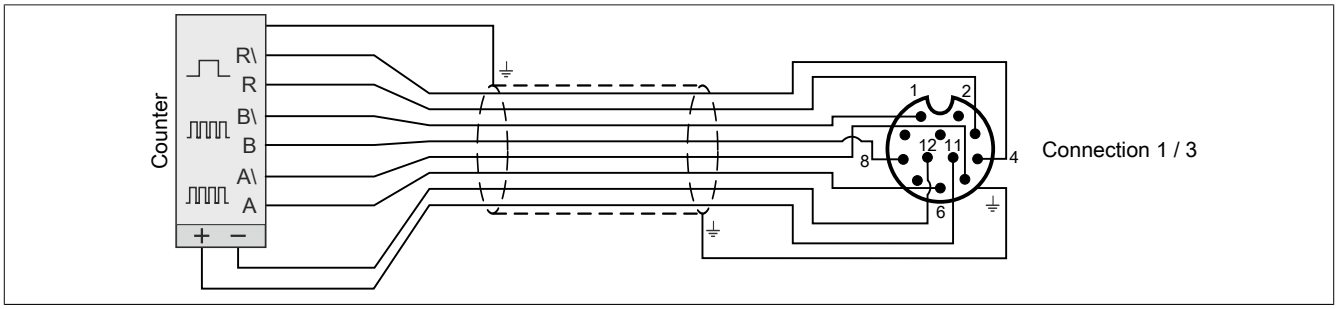

SSI encoder with 5 V power supply

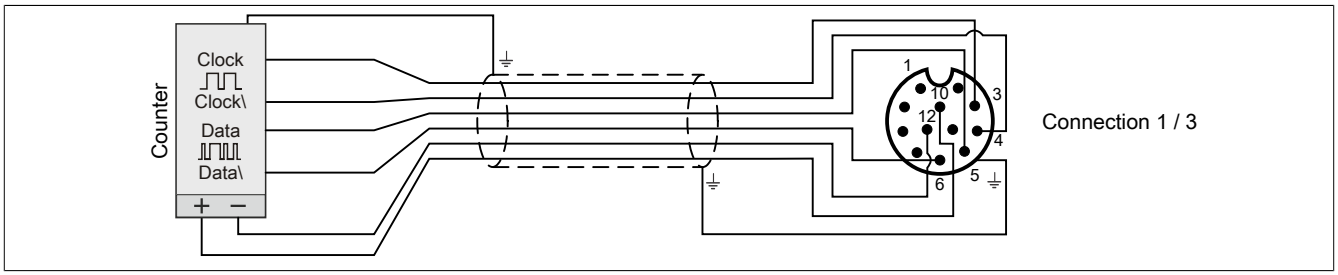

Sensor connection with 5 V and 24 V power supply

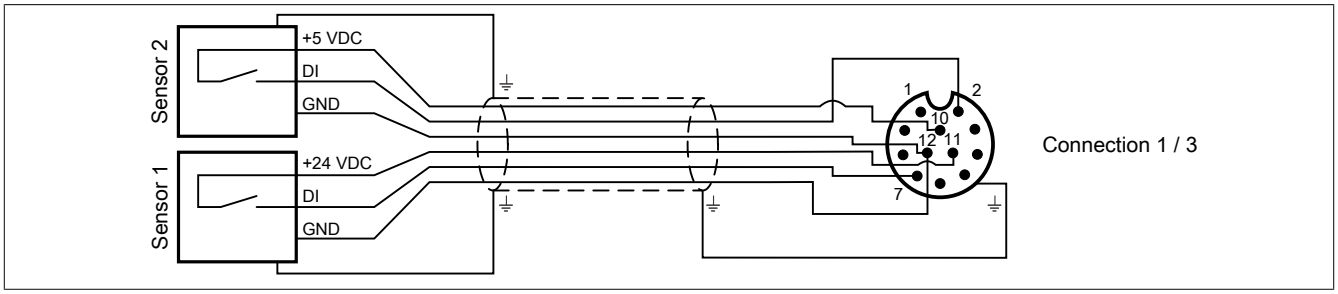

PWM output

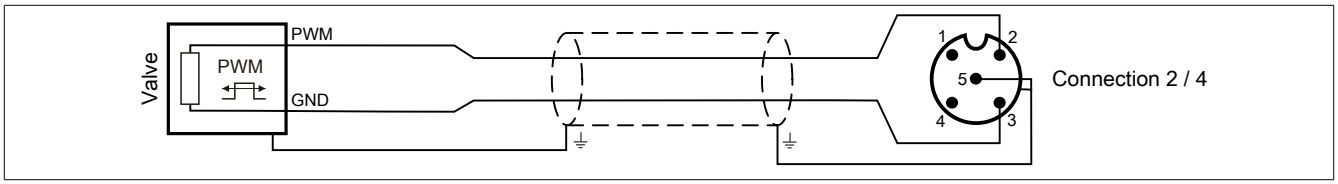

2.5 Input circuit diagram

5 V input

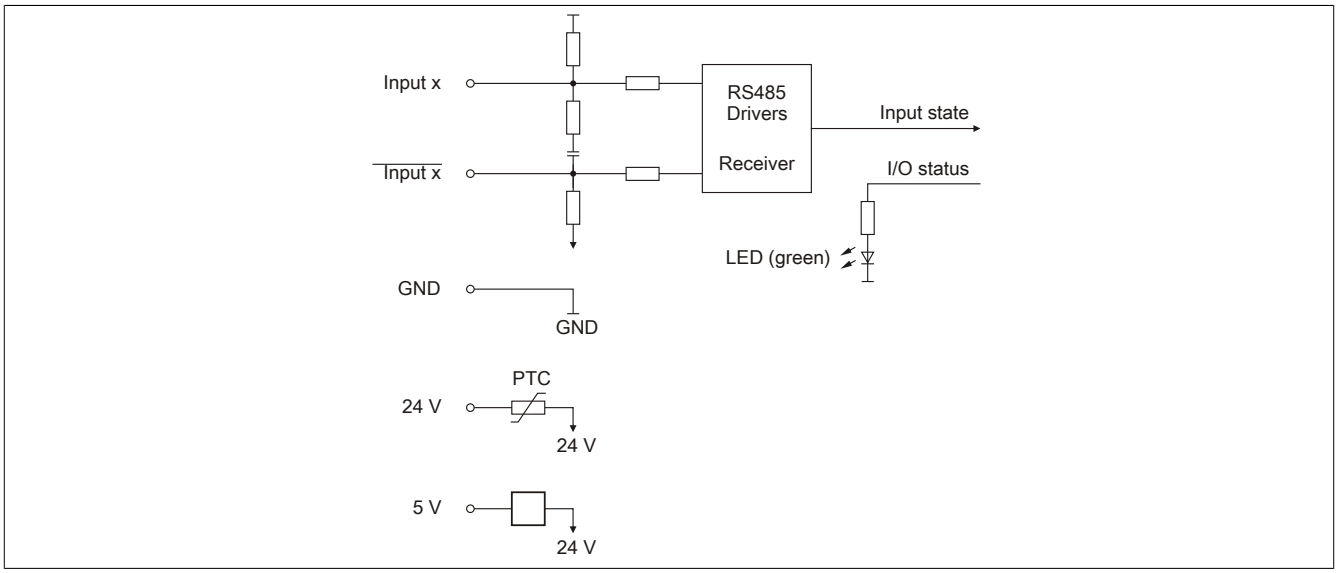

24 V input

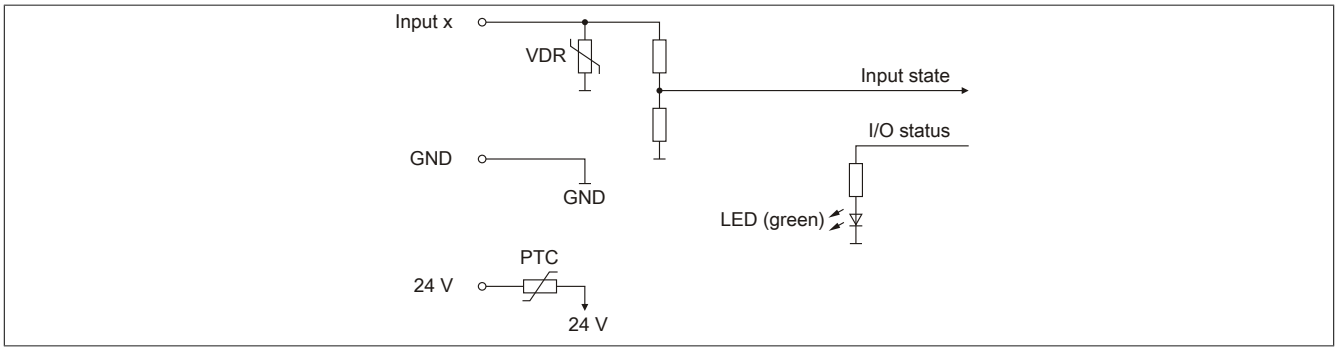

2.6 ABR/SSI - Output circuit diagram

5 V output

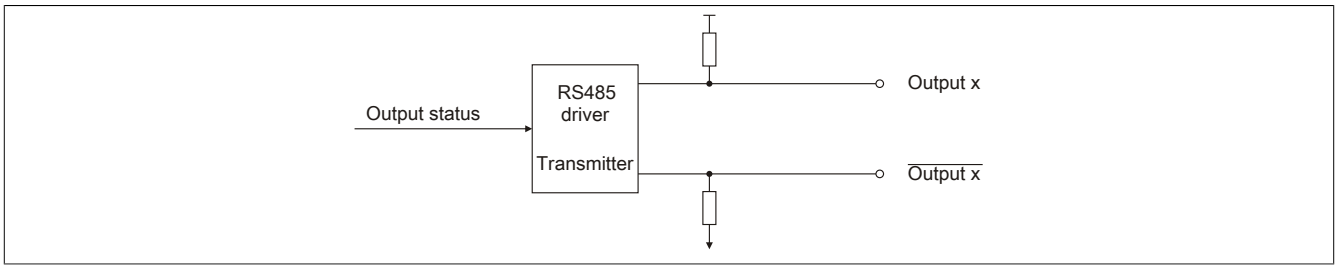

24 V output

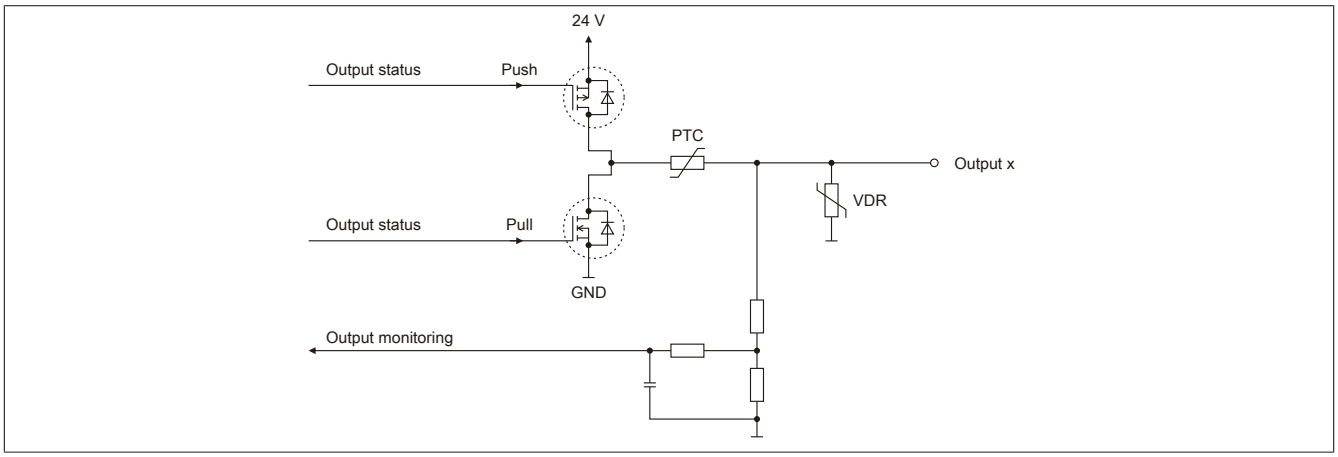

2.7 Switching inductive loads

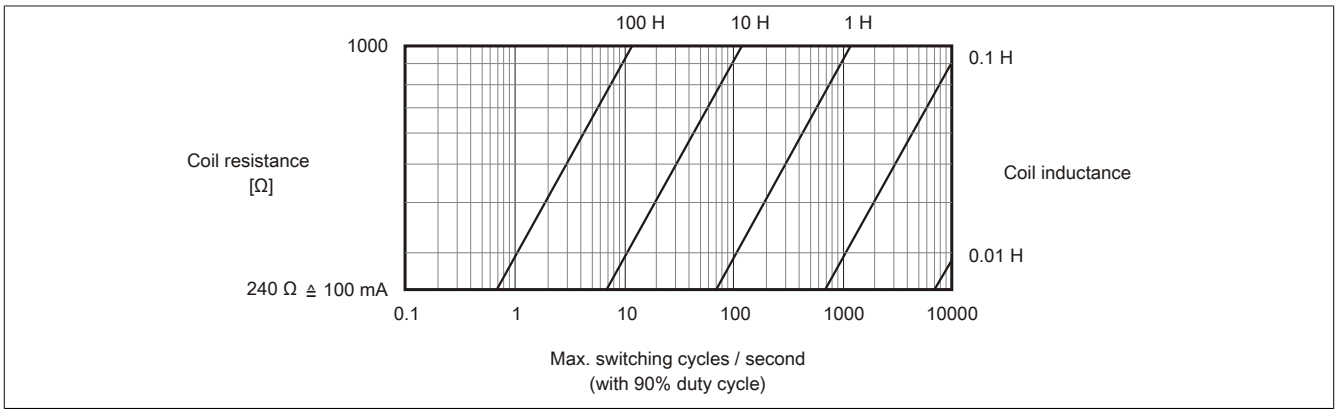

3 Function description

3.1 Function overview

The inputs of the counter module can be configured in a variety of ways.

Connections 1 and 3 are designed as 12-pin M12 connections. 1 incremental encoder or SSI encoder with 5 V differential signals can be connected to each. In addition, 2 digital channels are available on the same output, which can be configured as inputs for incremental encoders with status outputs (e.g. alarm). When configured as outputs, they function with SSI encoders, e.g. for preset and counting direction reversal.

2 further configurable digital channels are available on female connectors 2 and 4. The inputs can be used as latch, gate or reference enable switches and the outputs as comparator outputs, for example.

Information:

In contrast to freely configurable function model "Standard", the function selection cannot be modified in function model "Bus controller".

Function model "Bus controller":

- **1x ABR incremental encoder (5 V)**
- **1x SSI absolute encoder (5 V)**
- **1x PWM output (24 V)**
- **1x up/down counter (24 V)**
- **3x AB counter (24 V)**

3.1.1 Description of channel assignments

The functions listed here are directly assigned to the respective hardware channels and cannot be changed.

Channel	Signal connections
1	• Digital input/output 1 (24 VDC) • Event counter 1 • AB counter 1, signal line A • Up/down counter 1 - frequency
2	• Digital input/output 2 (24 VDC) • Event counter 2 • AB counter 1, signal line B • Up/down counter 1 - direction
3	• Digital input/output 3 (24 VDC) • Event counter 3 • AB counter 2, signal line A • Up/down counter 2 - frequency • PWM output 1
4	• Digital input/output 4 (24 VDC) • Event counter 4 • AB counter 2, signal line B • Up/down counter 2 - direction
5	• Digital input/output 5 (24 VDC) • Event counter 5 • AB counter 3, signal line A • Up/down counter 3 - frequency
6	• Digital input/output 6 (24 VDC) • Event counter 6 • AB counter 3, signal line B • Up/down counter 3 - direction
7	• Digital input/output 7 (24 VDC) • Event counter 7 • AB counter 4, signal line A • Up/down counter 4 - frequency • PWM output 2
8	• Digital input/output 8 (24 VDC) • Event counter 8 • AB counter 4 - signal line B • Up/down counter 4 - direction
9	• Digital input/output 9 (5 VDC) • Event counter 9 • ABR counter 1, signal line A • SSI encoder 1, data line

Channel	Signal connections
10	• Digital input/output 10 (5 VDC) • Event counter 10 • ABR encoder 1 - signal line B
11	• Digital input/output 11 (5 VDC) • Event counter 11 • ABR encoder 1 - signal line R • SSI encoder 1, clock line
12	Not used
13	• Digital input/output 13 (5 VDC) • Event counter 13 • ABR encoder 2 - signal line A • SSI encoder 2, data line
14	• Digital input/output 14 (5 VDC) • Event counter 14 • ABR encoder 2 - signal line B
15	• Digital input/output 15 (5 VDC) • Event counter 15 • ABR encoder 2 - signal line R • SSI encoder 2, clock line

Options available in addition to these basic functions, such as comparator outputs or latch inputs, can be configured freely to unused input/output channels.

3.2 Event functions

The module provides configurable event functions. An event function can be connected to physical I/O and the values derived from them (e.g. counters) or be purely used for internal processing.

Each event function has event inputs and outputs. Event functions can also only have event inputs or outputs. Each event output has a unique event ID. It is possible to configure when an event is generated on an event output. The effect of the arrival of an event is specified by the event function.

Event functions can also be linked to one another. The link takes place using the event input. Every event input has a 16-bit register to which the event number of the linked event output is written.

Information:

The module functions that can be configured in the Automation Studio I/O configuration are primarily based on these event functions and their links. Changes in the Automation Studio I/O configuration have multiple effects on event functions and their links.

The module functions cover the following areas:

- Edge events
- Direct input functions
- Direct output functions
- Counter event functions
- SSI event functions

3.2.1 List of event IDs

Various hardware and software functions send event IDs or require event IDs in order to start. The following table shows all of the IDs available to configure the module.

Event ID	Description	
Direct event inputs		
512	Comparator condition 1	FALSE
513		TRUE
544	Comparator condition 2	FALSE
545		TRUE
576	Comparator condition 3	FALSE
577		TRUE
608	Comparator condition 4	FALSE
609		TRUE
Counter event functions		
2,112	Counter function 1	Event function 1; FALSE
2,113		Event function 1; TRUE
2,144		Event function 2; FALSE
2,145		Event function 2; TRUE
2,368	Counter function 2	Event function 1; FALSE
2,369		Event function 1; TRUE
2,400		Event function 2; FALSE
2,401		Event function 2; TRUE
2,624	Counter function 3	Event function 1; FALSE
2,625		Event function 1; TRUE
2,656		Event function 2; FALSE
2,657		Event function 2; TRUE
2,880	Counter function 4	Event function 1; FALSE
2,881		Event function 1; TRUE
2,912		Event function 2; FALSE
2,913		Event function 2; TRUE
Edge events		
4,096	Falling edge on I/O channel	Channel 1
...		...
4111		Channel 16
4,112	Rising edge on I/O channel	Channel 1
...		...
4127		Channel 16
4,128	Rising or falling edge on I/O channel	Channel 1
...		...
4143		Channel 16
SSI counter events		
7,168	SSI 1	SSI valid
7,169		SSI ready

Event ID	Description	
7,424	SSI 2	SSI valid
7,425		SSI ready
SSI comparator events		
7,232	SSI 1 comparator condition	FALSE
7,233		TRUE
7,488	SSI 2 comparator condition	FALSE
7,489		TRUE
Timerevents		
208	Timer1	50 µs
209	Timer2	100 µs
210	Timer3	200 µs
211	Timer4	400 µs
212	Timer5	800 µs
213	Timer6	1600 µs
214	Timer7	3200 µs
215	Timer8	3200 µs (time offset to timer 7)
Network functions		
224	SOAISOP (**S**ynchronous **O**ut **A**synchronous **I**n **S**tart **O**f **P**rotocol)	
225	AOSISOP (**A**synchronous **O**ut **S**ynchronous **I**n **S**tart **O**f **P**rotocol)	
226	SOAIEOP (**S**ynchronous **O**ut **A**synchronous **I**n **E**nd **O**f **P**rotocol)	
227	AOSIEOP (**A**synchronous **O**ut **S**ynchronous **I**n **E**nd **O**f **P**rotocol)	
Idle event		
192	No-load operation	

Timer

There are 8 timer events that the module can generate.

Information:

The timers have the highest event priority. All other system functions are interrupted when a timer event occurs, and jitter for the amount of time it takes to process the event.

Idle event

Idle time is the time that remains after the system has processed all higher priority events and operations. The module performs the following functions during idle time:

- Handling of the asynchronous protocol
- Mechanism for (re-)linking events
- Operation of LEDs
- Execution of event event functions linked to the idle function

3.2.2 Edge events

3 event functions are available for each physical channel.

- Falling edge
- Rising edge
- Falling and rising edge

The respective event is triggered when an edge has been detected on the hardware input and the corresponding registers have been configured for the corresponding channel.

Edges are detected by the hardware and processed for each interrupt. The interrupt handler uses an event distributor, which requires a specific amount of time for each edge to operate the hardware and execute linked event functions. To reduce this time, edge detection can be enabled/disabled individually for each channel. To optimize system load and I/O jitter, it is important to only enable edge detection where it is actually needed.

Information:

Edge detection can also be used for channels that are configured to output.

Limiting the event frequency

To stabilize the system, there is a mechanism that limits the number of events created through edge recognition. After an edge event is processed, at least one idle event must occur before a new event is processed for the same edge.

This limit can be switched off per edge, in which case an event is generated from each edge. System overload can occur at high frequencies, however, which means that I/O operation can fail for up to 100 ms before the module enters the reset state.

Information:

The registers are described in "Edge events" on page 44.

3.3 Digital inputs and outputs

The module is equipped with 14 digital channels that can be configured as digital inputs or outputs.

Input channels

Each channel can be configured as an input channel. The input value is determined taking into account the polarity setting (normal/inverted) and is displayed under different names in the Automation Studio I/O mapping depending on the function used.

Output channels

Each channel can be configured as an output channel. The following steps must be carried out to configure a channel as an output:

- Enable bit 0 "Push" and/or bit 1 "Pull" in the channel configuration (register CfO_CFGchannel0x).
- Configure bits 4 to 7 in the channel configuration (register CfO_CFGchannel0x) to direct I/O.
- Set the set and reset mask for the affected channel to 0.

Set and reset masks of the outputs

The set and reset masks can be used to determine how the digital outputs can be switched.

- 0 enables manual setting and/or resetting of the digital outputs using registers DigitalOutput01 to 15.
- 1 prevents manual setting and/or resetting of the digital outputs using registers DigitalOutput01 to 15. This makes it possible to set or reset the outputs using the output event function.

Information:

The registers are described in "Digital inputs and outputs" on page 41.

3.3.1 Input states of the channels

The input states of the physical channels are determined taking into account the polarity settings (bit 2 in register CfO_CFGchannel). For a better overview, the bits determined are displayed under different names in the Automation Studio I/O mapping depending on the function used.

The following table shows which input channels can be assigned to the individual names/functions.

Bit	0	1	2	3	4	5	6	7	8	9	10	11	12	12	14
Channel xx	01	02	03	04	05	06	07	08	09	10	11	12	13	14	15
ComparatorActualValueABConnector01			•	•	•	•	•	•	•	•	•		•	•	•
ComparatorActualValueABConnector02	•	•			•	•	•	•	•	•	•		•	•	•
ComparatorActualValueABConnector03	•	•	•	•			•	•	•	•	•		•	•	•
ComparatorActualValueABConnector04	•	•	•	•	•	•			•	•	•		•	•	•
ComparatorActualValueABRConnector01	•	•	•	•	•	•	•	•					•	•	•
ComparatorActualValueABRConnector03	•	•	•	•	•	•	•	•	•	•	•				
ReferenceEnableSwitchABRConnector01	•	•	•	•	•	•	•	•					•	•	•
ReferenceEnableSwitchABRConnector03	•	•	•	•	•	•	•	•	•	•	•				
ComparatorActualValueCounterConnector01			•	•	•	•	•	•	•	•	•		•	•	•
ComparatorActualValueCounterConnector02	•	•			•	•	•	•	•	•	•		•	•	•
ComparatorActualValueCounterConnector03	•	•	•	•			•	•	•	•	•		•	•	•
ComparatorActualValueCounterConnector04	•	•	•	•	•	•			•	•	•		•	•	•
ComparatorActualValueSSIConnector01	•	•	•	•	•	•	•	•		•			•	•	•
ComparatorActualValueSSIConnector03	•	•	•	•	•	•	•	•	•	•	•			•	

Information:

The register is described in "Input states of the channels" on page 43.

3.3.2 Direct input functions

The module is equipped with 2 "direct input functions".

These event functions are based on the comparator functionality. All comparator functions can be operated in 4 different modes (see "Comparator modes" on page 22).

If the event configured for the input occurs, the event function compares the status of all direct I/O channels enabled in the comparison mask with the status specified in the comparison status. The event is generated according to the result of the comparison.

- If the corresponding bits are the same, it is event no. 512 or 545.
- If the corresponding bits are not the same, it is event no. 513 or 544.

Information:

The registers are described in "Direct input functions" on page 45.

3.3.3 Direct output functions

The module is equipped with 4 "direct output functions".

The effect of executing this event function is analogous to writing to register DigitalOutput02 to 08.

If the event configured for the output occurs, the changed output states are transferred directly to the hardware, but independently of the X2X cycle.

When using this event function, the set and reset masks of the corresponding outputs must be set to 1. Otherwise, the output state would constantly be overwritten by the values in register DigitalOutput02 to 08.

Information:

The registers are described in "Direct output functions" on page 46.

3.4 Counters and encoders

The module is equipped with 8 internal counter functions with 2 counter registers each. Each of these 8 counters is permanently assigned to 2 physical inputs. This assignment cannot be changed.

Each of the 8 counter functions can be operated in 3 different modes. The counter channels and counter registers are assigned as follows:

	Counter function mode		
	Edge counter	**AB encoder**	**Up/Down counter**
Counter channel 1[1)]	Counting pulses of edge counter 1	A	Metering pulses
Counter channel 2[1)]	Counting pulses of edge counter 2	B	Counting direction (0 = Positive, 1 = Negative)
Counter register 1	Counter value 1	Position	Counter value
Counter register 2	Counter value 2		

1) Corresponds to the physical channels of the counter functions (see "Description of channel assignments" on page 12).

Names of the counter registers

The counter registers apply different functions depending on the selected linkage of the event functions. For reasons of clarity, different names are used in Automation Studio and in the register description.

Channel	Counter function	Counter register	Function	Name in Automation Studio
1	1	1	AB encoder Up/Down counter Event counters	ABConnector01 CounterConnector01 EventCounter01
2		2	Event counters	EventCounter02
3	2	1	AB encoder Up/Down counter Event counters	ABConnector02 CounterConnector02 EventCounter03
4		2	Event counters	EventCounter04
5	3	1	AB encoder Up/Down counter Event counters	ABConnector03 CounterConnector03 EventCounter05
6		2	Event counters	EventCounter06
7	4	1	AB encoder Up/Down counter Event counters	ABConnector04 CounterConnector04 EventCounter07
8		2	Event counters	EventCounter08
9	5	1	Event counters	EventCounter09
10		2	Event counters	EventCounter10
11	6	1	Event counters	EventCounter11
12		2		Not used
13	7	1	Event counters	EventCounter13
14		2	Event counters	EventCounter14
15	8	1	Event counters	EventCounter15
16		2		Not used

Information:

The registers are described in "Counters and encoders" on page 47.

3.4.1 Counter event functions

Each of the 8 counter functions has 2 counter event functions. These consist of the following:

- Event ID that triggers the counter event function
- A window comparator
- Latch register for saving the counter value

After the counter event function has been completed, a combined event ID in the range from 2112 to 2913 (see "List of event IDs" on page 14) is transmitted.

Each counter event function also has the option to copy the current counter value to the "HW reference counter" when an event occurs (see "Counter value calculation" on page 20).

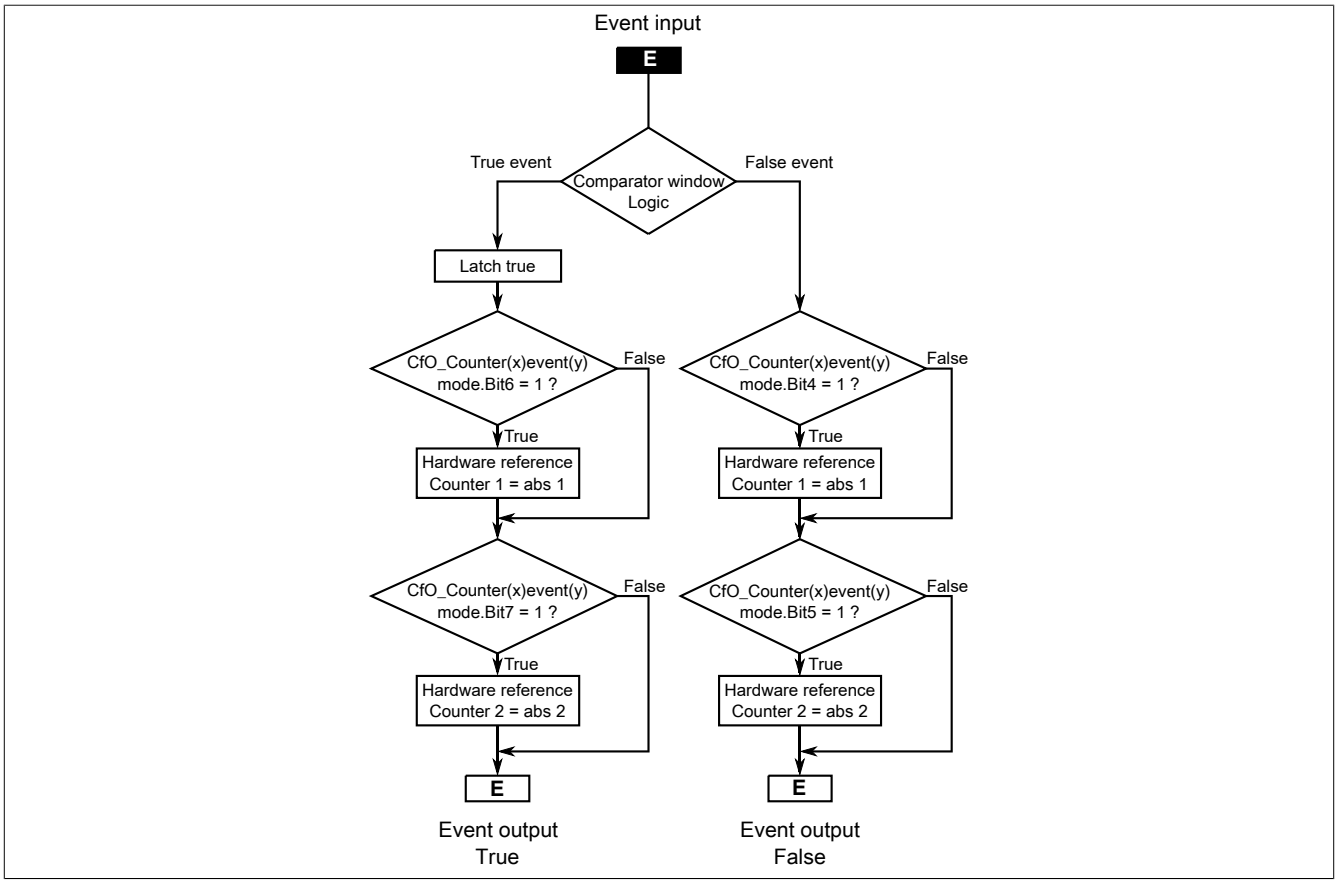

3.4.2 Counter value calculation

Selecting the counters

It is possible for each of the internal registers "counter1" and "counter2" to determine whether it is used for the counter calculation and whether the sign is taken into account.

Description	Value	Information
counterX - Use	0	0 is added instead of register "counterX".
	1	"counterX" is used for addition.
counterX - Sign	0	The sign of register "counterX" is not changed for addition.
	1	The sign of register "counterX" is reversed for addition.

Examples of calculation configurations

0b00000001	= 0x01	Only the "counter1 - use" bit is set, entering the contents of the "counter" (edge of counter event channel 1) directly in the counter register.
0b00000011	= 0x03	"counter 1 - use" and "counter1 - sign" bits are set. The sign is changed so that the counter register counts in the negative direction.
0b00001101	= 0x0d	Edges on counter input channel 1 increase the value in the counter register. Edges on counter input channel 2 decrease the value in the counter register. This value is the best setting for modes "AB counter" and "Up/Down counter".

Calculation procedure

The counter value for each counter function is calculated in 3 steps:

1. The 2 absolute value counters "abs1" and "abs2" are the basis for the counter value. These are only used within the module and cannot be read out. Depending on the mode, the physical input channels are mapped to these registers accordingly.

	Mode		
	Edge counters	**AB encoders**	**Up/Down counter**
abs1	Edges of counter channel 1	Increments in positive direction	Counter channel 2 = 0: Edges of counter channel 1 in up direction
abs2	Edges of counter channel 2	Increments in negative direction	Counter channel 2 = 1 Edges of counter channel 1 in down direction

2. 2 additional counters are formed from absolute value registers "abs1" and "abs2": "counter1" and "counter2". They are only used within the module and cannot be read out. The following values are used for the calculation:

- Absolute value registers "abs1" and "abs2"
- SW_reference_counter 1 and 2: This reference value can be specified by register CfO_CounterPresetValue to enable referencing ≠ 0.
- HW_reference_counter 1 and 2: Register CfO_CounterEventMode can be used to configure whether latched values are copied to these registers when counter events occur.

counter1 = abs1 + SW_reference_counter1 - HW_reference_counter1
counter2 = abs2 + SW_reference_counter2 - HW_reference_counter2

3. The counter registers contain the sum of the two internal counters "counter 1" and "counter 2". In register CfO_CounterConfigReg, the sign can be defined for each "Counter" register and whether it is used.

Counter register = counter1 + counter2

3.4.3 Comparator functions

Comparator functions are available on the module for the ABR, AB and up/down counters. These consist of the following:

- Event ID that triggers the comparator function
- Window comparator
- Latch register for storing the counter position

After the comparator function has been completed, the corresponding event ID is transmitted (see "List of event IDs" on page 14).

These are comparators that are implemented in software. They do not work actively, but passively, i.e. the comparison is only carried out when an event is received. The received event is forwarded to the TRUE or FALSE branch depending on the state of the comparator condition.

Window comparator

All comparator functions can be operated in 4 different modes. For a description, see "Comparator modes" on page 22.

Value	Information
0	Off
1	Individual
2	State change
3	Continuous

Calculation of the comparator

It is possible for each of the internal registers "counter1" and "counter2" to determine whether it is used for the comparator calculation and whether the sign is taken into account.

Description	Value	Information
counterX - Use	0	0 is added instead of register "counterX".
	1	"counterX" is used for addition.
counterX - Sign	0	The sign of register "counterX" is not changed for addition.
	1	The sign of register "counterX" is reversed for addition.

The comparator is calculated in the same way as the counter registers. In addition, a mask value can be created with which an AND operator is carried out before the comparison. This makes it possible to generate a comparator pulse every 2^n increments.

Information:

The registers are described in "Comparator functions" on page 50.

3.4.3.1 Comparator modes

Comparator functions can be operated in 4 different modes.

- **Off**
  Events are ignored.
- **Individual**
  The event function is executed once and then disables itself automatically. To re-enable it, the "event function mode" must be changed, preferably to "off" and then to the desired mode. This setting allows a hardware latch to be simulated.
- **State change**
  The event function only responds when the comparator state changes, i.e. from FALSE to TRUE (or vice versa). Only the first event for each status is processed, e.g. the first TRUE of a sequence of events with the comparator condition TRUE. After the event function is enabled, the first incoming event is used to determine the starting state and therefore not forwarded. This setting allows a hardware comparator to be simulated.
- **Continuous**
  Each incoming event is forwarded on the TRUE or FALSE branch depending on the comparator condition. This setting can be used to create filters for events.

3.4.3.2 Latch function

If the comparator returns TRUE, then the current counter value is latched and copied to these registers. The calculation of the comparator value used for the latch can be configured in the calculation register (CfO_Counter[x]event[y]config).

The latch registers apply different functions depending on the selected linkage of the event functions. For reasons of clarity, different names are used in the register description.

Counter 1 - Latch 1		
Event function	**Function**	**Name**
1	**AB encoder**	Latch01ABConnector01
	Up/Down counter	Latch01CounterConnector01
2	**AB encoder**	Latch02ABConnector01
	ABR encoders	Latch01ABRConnector01
	Up/Down counter	Latch02CounterConnector01

Counter 1 - Latch 2		
Event function	**Function**	**Name**
1	**AB encoder**	Latch01ABConnector02
	Up/Down counter	Latch01CounterConnector02
2	**AB encoder**	Latch02ABConnector02
	Up/Down counter	Latch02CounterConnector02

Counter 2 - Latch 1		
Event function	**Function**	**Name**
1	**AB encoder**	Latch01ABConnector03
	Up/Down counter	Latch01CounterConnector03
2	**AB encoder**	Latch02ABConnector03
	ABR encoders	Latch01ABRConnector03
	Up/Down counter	Latch02CounterConnector03

Counter 2 - Latch 2		
Event function	**Function**	**Name**
1	**AB encoder**	Latch01ABConnector04
	Up/Down counter	Latch01CounterConnector04
2	**AB encoder**	Latch02ABConnector04
	Up/Down counter	Latch02CounterConnector04

Information:

The register is described in "Read latch position or counter value" on page 52.

3.5 SSI encoder interface

The module provides 2 SSI encoders that are directly supported by the hardware. 2 24 V output channels are permanently set for each SSI encoder and cannot be modified (see also "Description of channel assignments" on page 12).

When using the SSI encoder, the associated clock channel must be configured to "Channel-specific" and "Push/Pull" in the channel configuration (register CfO_CFGchannel0x).

Encoder	Data channel	Clock channel
SSI1	9	11
SSI2	13	15

Information:

The registers are described in "SSI encoder interface" on page 52.

3.5.1 SSI event functions

Each of the 2 SSI encoders consists of an event function and an event input. The SSI cycle is started when an event is received on this input.

Information:

The SSI event function is not linked to an event by default, i.e. SSI functions are disabled.

2 events are transmitted from the SSI encoder interface.

- An "SSI valid" event is triggered immediately after the end of the SSI cycle if a new counter value is available.
- The "SSI ready" event then shows when the monoflop time has expired (tp in SSI encoder timing diagram). This is the earliest that the next SSI cycle can be started.

SSI encoder - Timing diagram

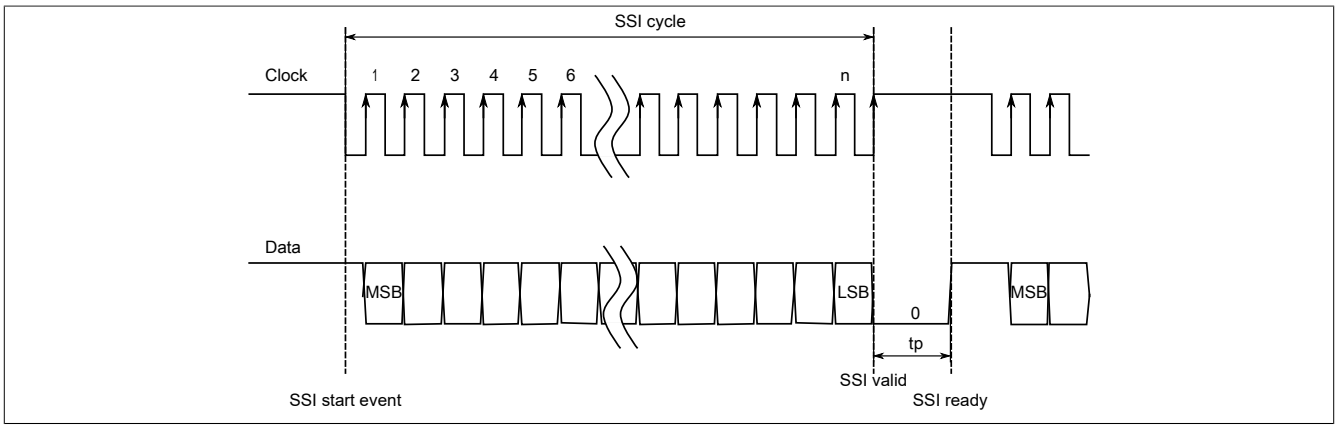

The SSI cycle is normally configured to network event 225 "AOSISOP". This ensures that the new encoder position is available for the next "I/O → Synchronous frame" transfer. It is important to note the SSI transfer time and the X2X cycle time since the SSI cycle must be completed within this time frame.

For a list of all possible event IDs, see "List of event IDs" on page 14.

3.5.2 SSI comparator condition

The module has an assigned comparator function for the SSI function. These consist of:

- Event ID that triggers the comparator function
- The window comparator
- Latch register for saving the counter value

After the comparator function has been completed, event ID 7232 to 7489 (see "List of event IDs" on page 14) is transmitted.

Window comparator

All comparator functions can be operated in 4 different modes. For a description, see "Comparator modes" on page 22.

Value	Information
0	Off
1	Individual
2	State change
3	Continuous

Performing the calculation

The position value used for the comparison is calculated as follows:

```
counter_window_value = ssi_counter & (2^ssi_data_bits - 1)
diff = counter_window_value - origin_comparator
if ((diff & (2^(comparator_mask)-1)) <= margin_comparator)
condition = True;
else
condition = False;
```

Latch function

If the comparison of the SSI window comparator returns "TRUE", the current SSI position is latched and saved.

3.6 PWM - Pulse width modulation

The module provides 2 PWM functions that are directly supported by the hardware. One 24 V output channel is permanently set for each PWM function and cannot be modified (see also "Description of channel assignments" on page 12).

When using the PWM function, the associated channel must be configured to "Channel-specific" in the channel configuration (register CfO_CFGchannel0x).

PWM function	Channel
PWM1	3
PWM2	7

Length of the PWM cycle

The basis for the length of the PWM cycle is a 48 MHz clock, which can be modified (divided). A PWM cycle consists of 1000 of these clock pulses resulting from the division. The period duration of the PWM cycle is therefore calculated as follows:

$$PWM_Cycle = 1000 \frac{prescale}{48000000} [s]$$

Switch-on/Switch-off time

The PWM output can be switched to logical 1 in 1/10% steps of the PWM cycle. Logical 1 means that the PWM output is switched on.

Value	Information
0	PWM output always off
1 to 999	Switch-on time in 1/10% increments
1000	PWM output always on

Calculating the period duration

The period duration is calculated using the following formula:

$$Periodendauer = \frac{n}{48000} s$$

A value of 2 to 65535 can be defined for n.

n	Period duration	Frequency
2	416 µs	24 kHz
24000	500 ms	2 Hz
48000	1 s	1 Hz
65535	1.36 s	0.73 Hz

Information:

The period duration of the PWM function must be greater than 500 µs. Periods that are too short cause the outputs to heat up considerably.

Information:

The registers are described in "PWM - Pulse width modulation" on page 56.

3.7 Time measurement function

The module has a time measurement function for each I/O channel. It can be configured separately for rising and falling edges on each channel.

A starting edge can be configured for each time measurement function. When a configured starting edge occurs, the value of the internal timer is saved in a FIFO buffer. This FIFO buffer holds up to 16 elements. When the actual trigger edge occurs, the difference in time between the starting edge and the triggered edge is copied to the respective register.

Bits 8 to 11 "Previous start edge" of registers CfO_EdgeTimeFallingMode and CfO_EdgeTimeRisingMode can be used to define which detected starting edge from the FIFO buffer should be used to calculate the difference. In addition, when the trigger edge occurs, the current counter value of the counter internally clocked by bits 12 to 15 "Resolution of time measurement" is copied to the timestamp register.

Information:

The time measurement function is an extension of edge detection, so all of the channels used must be configured there.

The following measurement functions are available:

- Detecting a falling or rising edge
  The falling or rising edge on the respective input can be detected.
- Displaying the first trigger edge
  The first falling or rising edge on the respective input since the associated bit was set can be recorded.
- Counting trigger edges
  Cyclic counters are incremented with each detected edge on the respective channel.
- Timestamp of the edge
  When an edge occurs on the respective channel, the current counter value of the module timer is saved.
- Time difference of the edge
  When an edge occurs on the respective channel, the time difference is saved.

Information:

The registers are described in "Time measurement function" on page 56.

3.8 Controlling the LED status indicators

The module LED status indicators can be controlled by the application. This allows blink signals to be output or the states of physical inputs and outputs to be displayed.

Possible modes:

Values	Information
0	LED blinking pattern
1	Inverted LED blinking pattern
2	Indicates the physical input state of a channel
3	Indicates the physical output state of a channel

States of the (inverted) LED indicators:

Values	Information
0	LED off
1	Blinking quickly
2	Blinking
3	Blinking slowly
4	Single flash
5	Double flash
6 to 15	Reserved

Information:

The register is described in "Configuring LED status indicators" on page 40.

3.9 Monitoring the encoder power supply

Monitoring the encoder power supply

The status of the integrated encoder supplies can be read.

Bit	Description
0	24 or 5 VDC encoder supply voltage OK
1	24 or 5 VDC encoder supply voltage faulty

Information:

The register is described in "Status of encoder supplies" on page 40.

4 Commissioning

4.1 Using the module on the bus controller

Function model 254 "Bus controller" is used by default only by non-configurable bus controllers. All other bus controllers can use other registers and functions depending on the fieldbus used.

For detailed information, see section "Additional information - Using I/O modules on the bus controller" in the X67 user's manual (version 3.30 or later).

4.1.1 CAN I/O bus controller

The module occupies 2 analog logical slots on CAN I/O.

4.2 Sample configurations

All configurations available in Automation Studio for AB encoders, ABR encoders, up/down counters and event counters are based on the 2 counter functions.
The following configuration examples show the values with which the module registers are initialized by Automation Studio to implement these functions.

4.2.1 I/O configuration - AB counter

The following table shows how the module's various event functions can be linked in order to configure an AB counter.

[x] stands for the counter function 1 to 4 used:

Register	Value	Comment
For the function		
CfO_Counter[x]config	0x01	Mode = Up/Down counter
CfO_Counter[x]configReg0	0x0D	Configures the calculation of the internal "counter1" and "counter2" registers (see "Counter value calculation" on page 20)
For the latch		
CfO_Counter[x]event0config	0x000D	Configuration of the calculation of the first value used for the latch
CfO_Counter[x]event0mode	0x03	Mode of the first counter event function - Continuous
CfO_Counter[x]event0IDwr	(any)	Number of the event that should trigger latch 1 ("Latch 01 - Channel" in the Automation Studio I/O configuration)
CfO_Counter[x]event1config	0x0D	Configuration of the calculation of the second value used for the latch
CfO_Counter[x]event1mode	0x03	Mode of the second counter event function - Continuous
CfO_Counter[x]event1IDwr	(any)	Number of the event that should trigger latch 2
For the comparator		
CfO_Counter1event1IDwr CfO_Counter3event1IDwr	0x00D0	Event number of Timer 1 (50 µs) **The latch and comparator must not have the same event number!**
CfO_Counter1event1config CfO_Counter3event1config	0x900D or 0xA00D	Configuration of the comparator for the second counter event
CfO_Counter1event1mode CfO_Counter3event1mode	0x03	Mode of the second counter event function - Continuous
CfO_DIREKTIOoutevent0IDwr CfO_DIREKTIOoutevent2IDwr	0x0861 0x0A61	TRUE event output of the respective counter for triggering the direct output function (set outputs)
CfO_DIREKTIOoutsetmask0 CfO_DIREKTIOoutsetmask2	0x08, 0x20, 0x80 0x02, 0x08, 0x80	Outputs that should be set if the comparator condition is TRUE
CfO_DIREKTIOoutevent1IDwr CfO_DIREKTIOoutevent3IDwr	0x0860 0x0A60	FALSE event output of the respective counter for triggering the direct output function (reset outputs)
CfO_DIREKTIOoutclearmask1 CfO_DIREKTIOoutclearmask3	0x08, 0x20, 0x80 0x02, 0x08, 0x80	Outputs that should be reset if the comparator condition is FALSE

4.2.2 I/O configuration - ABR encoder

The following table shows how the module's various event functions can be linked in order to configure an ABR encoder.

Register	Value	Comment
For the function		
CfO_Counter5PresetValue1 CfO_Counter7PresetValue1	(any)	Desired offset value for referencing
CfO_Counter5event0IDwr CfO_Counter7event0IDwr	0x0201	Link of the first counter event with the "direct input" comparison condition TRUE
CfO_Counter5config CfO_Counter7config	0x01	Mode = AB counter
CfO_Counter5configReg0 CfO_Counter7configReg0	0x0D	Configures the calculation of the internal "counter1" and "counter2" registers (see "Counter value calculation" on page 20)
CfO_DIREKTIOevent0IDwr CfO_DIREKTIOevent1IDwr	0x1002 or 0x1012	Selection of the desired input edge as trigger for the ABR encoder function
CfO_Counter5event0config CfO_Counter7event0config	0x0000	Configuration of the first counter event (for referencing)
CfO_DIREKTIOevent0mode CfO_DIREKTIOevent1mode	0x03	Mode of the "direct input function" - Continuous
CfO_DIREKTIOevent0compState CfO_DIREKTIOevent1compState	0x00 or 0x08	Comparison status for the "direct input function"
CfO_Ev0CompMask CfO_Ev1CompMask	0x08	Comparison mask for the "direct input function"
For the latch		
CfO_Counter5event0config CfO_Counter7event1config	0x000D	Configuration of the calculation of the value used for the latch
CfO_Counter5event0mode CfO_Counter7event1mode	0x03	Mode of the first counter event function - Continuous
CfO_Counter5event0IDwr CfO_Counter7event1IDwr	(any)	Number of the event that should trigger the latch
For the comparator		
CfO_Counter5event1IDwr CfO_Counter7event1IDwr	0x00D0	Event number of Timers1 (50 µs) **The latch and comparator must not have the same event number!**
CfO_Counter5event1config CfO_Counter7event1config	0x900D or 0xA00D	Configuration of the comparator for the second counter event
CfO_DIREKTIOoutevent0IDwr CfO_DIREKTIOoutevent2IDwr	0x0861 0x0A61	TRUE event output of the respective counter for triggering the direct output function (set outputs)
CfO_DIREKTIOoutsetmask0 CfO_DIREKTIOoutsetmask2	0x08, 0x20, 0x80 0x02, 0x08, 0x80	Outputs that should be set if the comparator condition is TRUE
CfO_DIREKTIOoutevent1IDwr CfO_DIREKTIOoutevent3IDwr	0x0860 0x0A60	FALSE event output of the respective counter for triggering the direct output function (reset outputs)
CfO_DIREKTIOoutclearmask1 CfO_DIREKTIOoutclearmask3	0x08, 0x20, 0x80 0x02, 0x08, 0x80	Outputs that should be reset if the comparator condition is FALSE

4.2.3 I/O configuration - Up/Down counter

The following table shows how the various event functions of the module can be linked to configure an up/down counter.

[x] stands for the counter function 1 to 4 used:

Register	Value	Comment
For the function		
CfO_Counter[x]config	0x03	Counter mode = Up/Down counter
CfO_Counter[x]configReg0	0x0D, 0x07	Configures the calculation of the internal "counter1" and "counter2" registers (see "Counter value calculation" on page 20)
For the latch		
CfO_Counter[x]event0config	0x0D, 0x07	Configuration of the calculation of the first value used for the latch
CfO_Counter[x]event0mode	0x03	Mode of the first counter function - Continuous
CfO_Counter[x]event0IDwr	(any)	Number of the event that should trigger latch 1
CfO_Counter[x]event1config	0x0D, 0x07	Configuration of the calculation of the second value used for the latch
CfO_Counter[x]event1mode	0x03	Mode of the second counter function - Continuous
CfO_Counter[x]event1IDwr	(any)	Number of the event that should trigger latch 2
For the comparator		
CfO_Counter1event1IDwr CfO_Counter3event1IDwr	0x00D0	Event number of Timer 1 (50 µs) **The latch and comparator must not have the same event number!**
CfO_Counter1event1config CfO_Counter3event1config	0x900D, 0xA00d or 0x9007, 0xA007	Configuration of the comparator for the second counter event
CfO_Counter1event1mode CfO_Counter3event1Imode	0x03	Mode of the second counter event function - Continuous
CfO_DIREKTIOoutevent0IDwr CfO_DIREKTIOoutevent2IDwr	0x0861	TRUE event output of the respective counter for triggering the direct output function (set outputs)
CfO_DIREKTIOoutsetmask0 CfO_DIREKTIOoutsetmask2	0x08, 0x20, 0x80 0x02, 0x08, 0x80	Outputs that should be set if the comparator condition is TRUE
CfO_DIREKTIOoutevent1IDwr CfO_DIREKTIOoutevent3IDwr	0x0860 0x0A60	FALSE event output of the respective counter for triggering the direct output function (reset outputs)
CfO_DIREKTIOoutclearmask1 CfO_DIREKTIOoutclearmask3	0x08, 0x20, 0x80 0x02, 0x08, 0x80	Outputs that should be reset if the comparator condition is FALSE

4.2.4 I/O configuration - Event counter

The following table shows how the module's various event functions can be linked in order to configure an event counter.

[x] stands for the counter function 1 to 8 used:

Register	Value	Comment
For event counters on uneven channel numbers (counter register 1)		
CfO_Counter[x]configReg0	0x01 or 0x03	Configures the calculation of the internal "counter1" and "counter2" registers (see "Counter value calculation" on page 20)
CfO_Counter[x]event0mode	0x43	Mode of the first counter event function and referencing configuration
CfO_Counter[x]event0IDwr	(any)	Number of the event that should trigger referencing
For event counters on even channels (counter register 2)		
CfO_Counter[x]configReg1	0x04 or 0x08	Configures the calculation of the internal "counter1" and "counter2" registers (see "Counter value calculation" on page 20)
CfO_Counter[x]event1mode	0x83	Mode of the second counter event function and referencing configuration
CfO_Counter[x]event1IDwr	(any)	Number of the event that should trigger referencing

5 Register description

5.1 General data points

In addition to the registers described in the register description, the module has additional general data points. These are not module-specific but contain general information such as serial number and hardware variant.

General data points are described in section "Additional information - General data points" in the X67 System user's manual.

5.2 Function model 0 "16-bit counter" and function model 1 "32-bit counter"

The following 2 models can be selected:

- 16-bit counter, Function model 0
- 32-bit counter - Function model 1
  Marked in the table by an additional "(D)" in the data type or "(_32Bit)" in the name.

The only difference between these two models is that they use either 16-bit or 32-bit registers for incremental counter functions. The following belong to this group:

- ABR encoders
- AB counters
- Up/down counters
- Event counter

All other module functions e.g. SSI, PWM and time measurement, as well as their data types, are identical for the two models.

Register	Name	Data type	Read		Write	
			Cyclic	Acyclic	Cyclic	Acyclic
Module configuration - General						
(N-1) * 2	CfO_CFGchannelN (index N = 01 to 15)	USINT				●
64 + N * 2	CfO_LEDNsource (index N = 0 to 7)	USINT				●
Configuration - Input for ABR encoders						
512	CfO_DIREKTIOevent0IDwr	UINT				●
544	CfO_DIREKTIOevent1IDwr	UINT				●
516	CfO_DIREKTIOevent0mode	USINT				●
548	CfO_DIREKTIOevent1mode	USINT				●
522	CfO_DIREKTIOevent0compState	UINT				●
554	CfO_DIREKTIOevent1compState	UINT				●
512	CfO_DIREKTIOevent0compState	UINT				●
544	CfO_DIREKTIOevent1compState	UINT				●
520	CfO_Ev0CompMask	UINT				●
552	CfO_Ev1CompMask	UINT				●
3088	CfO_Counter5PresetValue1(_32Bit)	U(D)INT				●
3600	CfO_Counter7PresetValue1(_32Bit)	U(D)INT				●
3092	CfO_Counter5PresetValue2(_32Bit)	U(D)INT				●
3604	CfO_Counter7PresetValue2(_32Bit)	U(D)INT				●
3072	CfO_Counter5config	USINT				●
3584	CfO_Counter7config	USINT				●
3080	CfO_Counter5configReg0	USINT				●
3592	CfO_Counter7configReg0	USINT				●
3082	CfO_Counter5configReg1	USINT				●
3594	CfO_Counter7configReg1	USINT				●
3136	CfO_Counter5event0IDwr	UINT				●
3648	CfO_Counter7event0IDwr	UINT				●
3168	CfO_Counter5event1IDwr	UINT				●
3680	CfO_Counter7event1IDwr	UINT				●
3144	CfO_Counter5event0config	UINT				●
3656	CfO_Counter7event0config	UINT				●
3176	CfO_Counter5event1config	UINT				●
3688	CfO_Counter7event1config	UINT				●
3172	CfO_Counter5event1mode	USINT				●
3684	CfO_Counter7event1mode	USINT				●
Configuration - Inputs for event counters						
2056 + (N-1) * 256	CfO_CounterNconfigReg0 (index N = 1 to 8)	USINT				●
2058 + (N-1) * 256	CfO_CounterNconfigReg1 (index N = 1 to 8)[1)]	USINT				●
2112 + (N-1) * 256	CfO_CounterNevent0IDwr (index N = 1 to 8)	UINT				●
2120 + (N-1) * 256	CfO_CounterNevent0config (index N = 1 to 8)	UINT				●
2116 + (N-1) * 256	CfO_CounterNevent0mode (index N = 1 to 8)	USINT				●
2144 + (N-1) * 256	CfO_CounterNevent1IDwr (index N = 1 to 8)[1)]	UINT				●

Register	Name	Data type	Read		Write	
			Cyclic	Acyclic	Cyclic	Acyclic
2152 + (N-1) * 256	CfO_CounterNevent1config (index N = 1 to 8)[1]	UINT				●
2148 + (N-1) * 256	CfO_CounterNevent1mode (index N = 1 to 8)[1]	USINT				●
Configuration - Inputs for AB and up/down counters						
2048 + (N-1) * 256	CfO_CounterNconfig (index N = 1 to 4)	USINT				●
2056 + (N-1) * 256	CfO_CounterNconfigReg0 (index N = 1 to 4)	USINT				●
2058 + (N-1) * 256	CfO_CounterNconfigReg1 (index N = 1 to 4)	USINT				●
2112 + (N-1) * 256	CfO_CounterNevent0IDwr (index N = 1 to 4)	UINT				●
2120 + (N-1) * 256	CfO_CounterNevent0config (index N = 1 to 4)	UINT				●
2116 + (N-1) * 256	CfO_CounterNevent0mode (index N = 1 to 4)	USINT				●
2144 + (N-1) * 256	CfO_CounterNevent1IDwr (index N = 1 to 4)	UINT				●
2152 + (N-1) * 256	CfO_CounterNevent1config (index N = 1 to 4)	UINT				●
2148 + (N-1) * 256	CfO_CounterNevent1mode (index N = 1 to 4)	USINT				●
Configuration - Inputs for SSI encoders						
7176	CfO_SSI1cfg	UINT				●
7432	CfO_SSI2cfg	UINT				●
7180	CfO_SSI1control	USINT				●
7436	CfO_SSI2control	USINT				●
7168	CfO_SSI1eventIDwr	UINT				●
7424	CfO_SSI2eventIDwr	UINT				●
7232	CfO_SSI1event0IDwr	UINT				●
7488	CfO_SSI2event0IDwr	UINT				●
7240	CfO_SSI1event0config	UINT				●
7496	CfO_SSI2event0config	UINT				●
7236	CfO_SSI1event0mode	USINT				●
7492	CfO_SSI2event0mode	USINT				●
7172	ConfigAdvanced01	UDINT				●
7428	ConfigAdvanced02	UDINT				●
Configuration - Comparator function for ABR and SSI encoders as well as AB and up/down counters						
256	CfO_OutClearMask	UINT				●
258	CfO_OutSetMask	UINT				●
1024 + N * 32	CfO_DIREKTIOouteventNIDwr (index N = 0 to 3)	UINT				●
1034 + N * 32	CfO_DIREKTIOoutsetmaskN (index N = 0 to 3)	UINT				●
1032 + N * 32	CfO_DIREKTIOoutclearmaskN (index N = 0 to 3)	UINT				●
Configuration - Outputs for PWM (pulse width modulation)						
6144	CfO_PWM0prescaler	UINT				●
6160	CfO_PWM1prescaler	UINT				●
Module communication - General						
40	Status of encoder supplies	USINT	●			
	PowerSupply01	Bit 0				
	PowerSupply02	Bit 1				
Communication - Digital inputs						
264	DigitalInput1_16	UINT	●			
	DigitalInput01	Bit 0				
	...	...				
	DigitalInput15	Bit 14				
Communication - Digital outputs						
260	DigitalOutput1_16	UINT			●	
	DigitalOutput01	Bit 0				
	...	...				
	DigitalOutput15	Bit 14				
264	Status of the digital outputs	UINT	●			
	StatusDigitalOutput01	Bit 0				
	...	...				
	StatusDigitalOutput15	Bit 14				
Communication - Event counters						
2080 + (N-1) * 256	EventCounter01 (index N = 1, 3, 5 ... 15)	U(D)INT	●			
2084 + (N-1) * 256	EventCounter02 (index N = 2, 4, 6 ... 14)[2]	U(D)INT	●			
Communication - Input for ABR encoders (optionally with comparator)						
3104	ABRConnector01	(D)INT	●			
3616	ABRConnector03	(D)INT	●			
3140	ReferenceModeABRConnector01	USINT			●	
3652	ReferenceModeABRConnector03	USINT			●	
3184	OriginComparatorABRConnector01	(D)INT			●	
3696	OriginComparatorABRConnector03	(D)INT			●	
3188	MarginComparatorABRConnector01	U(D)INT			●	
3700	MarginComparatorABRConnector03	U(D)INT			●	
264	Input states of the channels	UINT	●			
	ReferenceEnableSwitchABRConnector01 or ReferenceEnableSwitchABRConnector03 (without comparator) ComparatorActualValueABRConnector01 or ComparatorActualValueABRConnecto03 (with comparator)	Bit x				
3196	Latch01ABR01	(D)INT	●			
3708	Latch01ABR02	(D)INT	●			

Register	Name	Data type	Read		Write	
			Cyclic	Acyclic	Cyclic	Acyclic
3142	StatusABRConnector01	USINT	•			
3654	StatusABRConnector03	USINT	•			
Communication - Input for AB counters						
2080 + (N-1) * 256	ABConnector0N (index N = 1 to 4)	(D)INT	•			
2160 + (N-1) * 256	OriginComparatorABConnector0N (index N = 1 to 4)	(D)INT			•	
2164 + (N-1) * 256	MarginComparatorABConnector01N (index N = 1 to 4)	U(D)INT			•	
264	Input states of the channels	UINT	•			
	ComparatorActualValueCounterConnector0N (index N = 1 to 4)	Bit x				
2140 + (N-1) * 256	Latch01AB0N (index N = 1 to 4)	(D)INT	•			
2172 + (N-1) * 256	Latch02AB0N (index N = 1 to 4)	(D)INT	•			
Communication - Up/Down counters						
2080 + (N-1) * 256	CounterConnector0N (index N = 1 to 4)	U(D)INT	•			
2160 + (N-1) * 256	OriginComparatorCounterConnector0N (index N = 1 to 4)	U(D)INT			•	
2164 + (N-1) * 256	MarginComparatorCounterConnector0N (index N = 1 to 4)	U(D)INT			•	
264	Input states of the channels	UINT	•			
	ComparatorActualValueCounterConnector0N (index N = 1 to 4)	Bit x				
2140 + (N-1) * 256	Latch01CounterConnector0N (index N = 1 to 4)	U(D)INT	•			
2172 + (N-1) * 256	Latch02CounterConnector0N (index N = 1 to 4)	U(D)INT	•			
Communication - Input for SSI encoders						
7184	SSIConnector01	UDINT	•			
7440	SSIConnector03	UDINT	•			
3108	EventCounter10	UINT	•			
3620	EventCounter14	UINT	•			
7248	OriginComparatorSSIConnector01	UDINT			•	
7504	OriginComparatorSSIConnector03	UDINT			•	
7252	MarginComparatorSSIConnector01	UDINT			•	
7508	MarginComparatorSSIConnector03	UDINT			•	
264	Input states of the channels	UINT	•			
	ComparatorActualValueSSIConnector01 or ComparatorActualValueSSIConnector01	Bit x				
7260	Latch01SSIConnector01	UDINT	•			
7516	Latch01SSIConnector03	UDINT	•			
Communication - Outputs for PWM (pulse width modulation)						
6146	PWMOutput03	UINT			•	
6162	PWMOutput07	UINT			•	
Configuration - Edge detection						
4104	CfO_EdgeDetectFalling	UINT				•
4106	CfO_EdgeDetectRising	UINT				•
4108	CfO_FallingDisProtection	UINT				•
4110	CfO_RisingDisProtection	UINT				•
Configuration - Time measurement						
4336	CfO_EdgeTimeglobalenable	USINT				•
4344 + N * 8[2)]	CfO_EdgeTimeFallingModeN (index N = 01 to 15)	UINT				•
4472 + N * 8[2)]	CfO_EdgeTimeRisingModeN (index N = 01 to 15)	UINT				•
Communication - Time measurement						
4342	Trigger rising edge detection	USINT			•	
	TriggerRisingCH01	Bit 0				
	...	...				
	TriggerRisingCH08	Bit 7				
4343	Trigger rising edge detection	USINT			•	
	TriggerRisingCH09	Bit 0				
	...	...				
	TriggerRisingCH15	Bit 6				
4350	Show first rising trigger edge	USINT	•			
	BusyTriggerRisingCH01	Bit 0				
	...	...				
	BusyTriggerRisingCH08	Bit 7				
4351	Show first rising trigger edge	USINT	•			
	BusyTriggerRisingCH09	Bit 0				
	...	...				
	BusyTriggerRisingCH15	Bit 6				
4340	Trigger falling edge detection	USINT			•	
	TriggerFallingCH01	Bit 0				
	...	...				
	TriggerFallingCH08	Bit 7				
4341	Trigger falling edge detection	USINT			•	
	TriggerFallingCH09	Bit 0				
	...	...				
	TriggerFallingCH15	Bit 6				

Register	Name	Data type	Read		Write	
			Cyclic	Acyclic	Cyclic	Acyclic
4348	Show first falling trigger edge	USINT	●			
	BusyTriggerFallingCH01	Bit 0				
	...	...				
	BusyTriggerFallingCH08	Bit 7				
4349	Show first falling trigger edge	USINT	●			
	BusyTriggerFallingCH09	Bit 0				
	...	...				
	BusyTriggerFallingCH15	Bit 6				
4474 + N * 8[2)]	CountRisingCHN (index N = 01 to 15)	USINT	●			
4476 + N * 8[2)]	TimeStampRisingCHN (index N = 01 to 15)	UINT	●			
4478 + N * 8[2)]	TimeDiffRisingCHN (index N = 01 to 15)	UINT	●			
4346 + N * 8[2)]	CountFallingCHN (index N = 01 to 15)	USINT	●			
4348 + N * 8[2)]	TimeStampFallingCHN (index N = 01 to 15)	UINT	●			
4350 + N * 8[2)]	TimeDiffFallingCHN (index N = 01 to 15)	UINT	●			

1) Registers with index value 6 and 8 are not used.
2) Register with index value 12 does not exist.

5.3 Function model 2 - MotionConfiguration

A 16-bit or 32-bit data format can be set in the configuration.

The following minimum requirements must be met to be able to use function model 2 - MotionConfiguration:

- Hardware upgrade: V1.3.0.0
- Hardware variant: 10
- Firmware: 115

Register	Name	Data type	Read		Write	
			Cyclic	Acyclic	Cyclic	Acyclic
Module configuration - General						
(N-1) * 2	CfO_CFGchannelN (index N = 01 to 15)	USINT				•
64 + N * 2	CfO_LEDNsource (index N = 0 to 7)	USINT				•
Configuration - Input for ABR encoder						
512	CfO_DIREKTIOevent0IDwr	UINT				•
544	CfO_DIREKTIOevent1IDwr	UINT				•
516	CfO_DIREKTIOevent0mode	USINT				•
548	CfO_DIREKTIOevent1mode	USINT				•
522	CfO_DIREKTIOevent0compState	UINT				•
554	CfO_DIREKTIOevent1compState	UINT				•
512	CfO_DIREKTIOevent0compState	UINT				•
544	CfO_DIREKTIOevent1compState	UINT				•
520	CfO_Ev0CompMask	UINT				•
552	CfO_Ev1CompMask	UINT				•
3088	CfO_Counter5PresetValue1	UINT				•
3600	CfO_Counter7PresetValue1	UINT				•
3092	CfO_Counter5PresetValue2	UINT				•
3604	CfO_Counter7PresetValue2	UINT				•
3134	CfO_Encoder01Command	USINT				•
3646	CfO_Encoder02Command	USINT				•
3072	CfO_Counter5config	USINT				•
3584	CfO_Counter7config	USINT				•
3080	CfO_Counter5configReg0	USINT				•
3592	CfO_Counter7configReg0	USINT				•
3082	CfO_Counter5configReg1	USINT				•
3594	CfO_Counter7configReg1	USINT				•
3136	CfO_Counter5event0IDwr	UINT				•
3648	CfO_Counter7event0IDwr	UINT				•
3168	CfO_Counter5event1IDwr	UINT				•
3680	CfO_Counter7event1IDwr	UINT				•
3144	CfO_Counter5event0config	UINT				•
3656	CfO_Counter7event0config	UINT				•
3176	CfO_Counter5event1config	UINT				•
3688	CfO_Counter7event1config	UINT				•
3172	CfO_Counter5event1mode	USINT				•
3684	CfO_Counter7event1mode	USINT				•
Configuration - Inputs for event counters						
2056 + (N-1) * 256	CfO_CounterNconfigReg0 (index N = 1 to 8)	USINT				•
2058 + (N-1) * 256	CfO_CounterNconfigReg1 (index N = 1 to 8)[1)]	USINT				•
2112 + (N-1) * 256	CfO_CounterNevent0IDwr (index N = 1 to 8)	UINT				•
2120 + (N-1) * 256	CfO_CounterNevent0config (index N = 1 to 8)	UINT				•
2116 + (N-1) * 256	CfO_CounterNevent0mode (index N = 1 to 8)	USINT				•
2144 + (N-1) * 256	CfO_CounterNevent1IDwr (index N = 1 to 8)[1)]	UINT				•
2152 + (N-1) * 256	CfO_CounterNevent1config (index N = 1 to 8)[1)]	UINT				•
2148 + (N-1) * 256	CfO_CounterNevent1mode (index N = 1 to 8)[1)]	USINT				•
Configuration - Inputs for AB and up/down counters						
2048 + (N-1) * 256	CfO_CounterNconfig (index N = 1 to 4)	USINT				•
2056 + (N-1) * 256	CfO_CounterNconfigReg0 (index N = 1 to 4)	USINT				•
2058 + (N-1) * 256	CfO_CounterNconfigReg1 (index N = 1 to 4)	USINT				•
2112 + (N-1) * 256	CfO_CounterNevent0IDwr (index N = 1 to 4)	UINT				•
2120 + (N-1) * 256	CfO_CounterNevent0config (index N = 1 to 4)	UINT				•
2116 + (N-1) * 256	CfO_CounterNevent0mode (index N = 1 to 4)	USINT				•
2144 + (N-1) * 256	CfO_CounterNevent1IDwr (index N = 1 to 4)	UINT				•
2152 + (N-1) * 256	CfO_CounterNevent1config (index N = 1 to 4)	UINT				•
2148 + (N-1) * 256	CfO_CounterNevent1mode (index N = 1 to 4)	USINT				•
Configuration - Comparator function for ABR and SSI encoders as well as AB and up/down counters						
256	CfO_OutClearMask	UINT				•
258	CfO_OutSetMask	UINT				•
1024 + N * 32	CfO_DIREKTIOouteventNIDwr (index N = 0 to 3)	UINT				•
1034 + N * 32	CfO_DIREKTIOoutsetmaskN (index N = 0 to# 3)	UINT				•
1032 + N * 32	CfO_DIREKTIOoutclearmaskN (index N = 0 to 3)	UINT				•
Module communication - General						

Register	Name	Data type	Read		Write	
			Cyclic	Acyclic	Cyclic	Acyclic
40	Status of encoder supplies	USINT	•			
	PowerSupply01	Bit 0				
	PowerSupply02	Bit 1				
Communication - Digital inputs						
264	DigitalInput1_16	UINT	•			
	DigitalInput01	Bit 0				
	...	...				
	DigitalInput15	Bit 14				
Communication - Digital outputs						
260	DigitalOutput1_16	UINT			•	
	DigitalOutput01	Bit 0				
	...	...				
	DigitalOutput15	Bit 14				
264	Status of the digital outputs	UINT	•			
	StatusDigitalOutput01	Bit 0				
	...	...				
	StatusDigitalOutput15	Bit 14				
Communication - Event counter						
2080 + (N-1) * 256	EventCounter01 (index N = 1, 3, 5 ... 15)	U(D)INT	•			
2084 + (N-1) * 256	EventCounter02 (index N = 2, 4, 6 ... 14)[2)]	U(D)INT	•			
Communication - Input for ABR encoder						
3120	RefPulsePos01	INT	•			
3124	RefPulsePos01	DINT	•			
3632	RefPulsePos02	INT	•			
3636	RefPulsePos02	DINT	•			
3132	RefPulseCnt01	SINT	•			
3644	RefPulseCnt02	SINT	•			
3128	Encoder01Reset	BOOL			•	
3640	Encoder02Reset	BOOL			•	
0	EncOk01	BOOL	•			
0	EncOk02	BOOL	•			
3112	Encoder01	INT	•			
3116	Encoder01	DINT	•			
3624	Encoder02	INT	•			
3628	Encoder02	DINT	•			
264	ReferenceEnableSwitchABRConnector01 or ReferenceEnableSwitchABRConnector03 (without comparator) ComparatorActualValueABRConnector01 or ComparatorActualValueABRConnecto03 (with comparator)	Bit x	•			
3196	Latch01ABR01	(D)INT	•			
3708	Latch01ABR02	(D)INT	•			
3142	StatusABRConnector01	USINT	•			
3654	StatusABRConnector03	USINT	•			
Communication - Input for AB counter						
2080 + (N-1) * 256	ABConnector0N (index N = 1 to 4)	(D)INT	•			
2160 + (N-1) * 256	OriginComparatorABConnector0N (index N = 1 to 4)	(D)INT			•	
2164 + (N-1) * 256	MarginComparatorABConnector01N (index N = 1 to 4)	U(D)INT			•	
264	Input states of the channels	UINT	•			
	ComparatorActualValueCounterConnector0N (index N = 1 to 4)	Bit x				
2140 + (N-1) * 256	Latch01AB0N (index N = 1 to 4)	(D)INT	•			
2172 + (N-1) * 256	Latch02AB0N (index N = 1 to 4)	(D)INT	•			
Communication - Up/Down counter						
2080 + (N-1) * 256	CounterConnector0N (index N = 1 to 4)	U(D)INT	•			
2160 + (N-1) * 256	OriginComparatorCounterConnector0N (index N = 1 to 4)	U(D)INT			•	
2164 + (N-1) * 256	MarginComparatorCounterConnector0N (index N = 1 to 4)	U(D)INT			•	
264	Input states of the channels	UINT	•			
	ComparatorActualValueCounterConnector0N (index N = 1 to 4)	Bit x				
2140 + (N-1) * 256	Latch01CounterConnector0N (index N = 1 to 4)	U(D)INT	•			
2172 + (N-1) * 256	Latch02CounterConnector0N (index N = 1 to 4)	U(D)INT	•			
Configuration - Edge detection						
4104	CfO_EdgeDetectFalling	UINT				•
4106	CfO_EdgeDetectRising	UINT				•
4108	CfO_FallingDisProtection	UINT				•
4110	CfO_RisingDisProtection	UINT				•
Configuration - Time measurement						
4336	CfO_EdgeTimeglobalenable	USINT				•
4344 + N * 8[2)]	CfO_EdgeTimeFallingModeN (index N = 01 to 15)	UINT				•
4472 + N * 8[2)]	CfO_EdgeTimeRisingModeN (index N = 01 to 15)	UINT				•
Communication - Time measurement						

Register	Name	Data type	Read		Write	
			Cyclic	Acyclic	Cyclic	Acyclic
4342	Trigger rising edge detection	USINT			•	
	TriggerRisingCH01	Bit 0				
	...	...				
	TriggerRisingCH08	Bit 7				
4343	Trigger rising edge detection	USINT			•	
	TriggerRisingCH09	Bit 0				
	...	...				
	TriggerRisingCH15	Bit 6				
4350	Show first rising trigger edge	USINT	•			
	BusyTriggerRisingCH01	Bit 0				
	...	...				
	BusyTriggerRisingCH08	Bit 7				
4351	Show first rising trigger edge	USINT	•			
	BusyTriggerRisingCH09	Bit 0				
	...	...				
	BusyTriggerRisingCH15	Bit 6				
4340	Trigger falling edge detection	USINT			•	
	TriggerFallingCH01	Bit 0				
	...	...				
	TriggerFallingCH08	Bit 7				
4341	Trigger falling edge detection	USINT			•	
	TriggerFallingCH09	Bit 0				
	...	...				
	TriggerFallingCH15	Bit 6				
4348	Show first falling trigger edge	USINT	•			
	BusyTriggerFallingCH01	Bit 0				
	...	...				
	BusyTriggerFallingCH08	Bit 7				
4349	Show first falling trigger edge	USINT	•			
	BusyTriggerFallingCH09	Bit 0				
	...	...				
	BusyTriggerFallingCH15	Bit 6				
4474 + N * 8[2]	CountRisingCHN (index N = 01 to 15)	USINT	•			
4476 + N * 8[2]	TimeStampRisingCHN (index N = 01 to 15)	UINT	•			
4478 + N * 8[2]	TimeDiffRisingCHN (index N = 01 to 15)	UINT	•			
4346 + N * 8[2]	CountFallingCHN (index N = 01 to 15)	USINT	•			
4348 + N * 8[2]	TimeStampFallingCHN (index N = 01 to 15)	UINT	•			
4350 + N * 8[2]	TimeDiffFallingCHN (index N = 01 to 15)	UINT	•			

1) Registers with index values 6 and 8 are not used.
2) Register with index value 12 does not exist.

5.4 Function model 254 - Bus controller

Unlike the function models 0 and 1, this model only offers a selection of functions with a limited scope of configuration on the module.

The following functions are provided and can be run at the same time:

- 1 SSI encoder
- 1 ABR encoder with configurable reference pulse edge and reference position
- 1 event counter with configurable counting direction
- 3 AB counters
- 1 PWM output

Register	Offset[1)]	Name	Data type	Read		Write	
				Cyclic	Acyclic	Cyclic	Acyclic
Configuration - Event counter							
2816	-	CfO_Counter4config	USINT				•
2824	-	CfO_Counter4configReg0	USINT				•
2826	-	CfO_Counter4configReg1	USINT				•
Configuration - ABR encoder							
3088	-	CfO_Counter5PresetValue1	UINT				•
3092	-	CfO_Counter5PresetValue2	UINT				•
3072	-	CfO_Counter5config	USINT				•
3080	-	CfO_Counter5configReg0	USINT				•
3082	-	CfO_Counter5configReg1	USINT				•
3136	-	CfO_Counter5event0IDwr	UINT				•
3144	-	CfO_Counter5event0config	UINT				•
512	-	CfO_DIREKTIOevent0IDwr	UINT				•
516	-	CfO_DIREKTIOevent0mode	USINT				•
Configuration - AB counter							
2048 + (N-1) * 256	-	CfO_CounterNconfig (index N = 1 to 3)	USINT				•
2056 + (N-1) * 256	-	CfO_CounterNconfigReg0 (index N = 1 to 3)	USINT				•
2058 + (N-1) * 256	-	CfO_CounterNconfigReg1 (index N = 1 to 3)	USINT				•
Configuration - Inputs for SSI encoders							
7424	-	CfO_SSI2eventIDwr	UINT				•
7428	-	ConfigAdvanced02	UDINT				•
Configuration - Outputs for PWM (pulse width modulation)							
6160	-	CfO_PWM1prescaler	UINT				•
Module communication - General							
40	3	Status of encoder supplies	USINT	•			
		PowerSupply01	Bit 0				
		PowerSupply02	Bit 1				
Communication - Event counters							
2852	14	EventCounter08	UINT	•			
Communication - Input for ABR encoders							
3104	0	ABRConnector01	INT	•			
3140	0	ReferenceModeABRConnector01	USINT			•	
3142	2	StatusABRConnector01	USINT	•			
Communication - Input for AB counters							
2080	8	ABConnector01	INT	•			
2336	10	ABConnector02	INT	•			
2592	12	ABConnector02	INT	•			
Communication - Input for SSI encoders							
7440	4	SSIConnector03	UDINT	•			
Communication - Outputs for PWM (pulse width modulation)							
6162	2	PWMOutput07	UINT			•	

1) The offset specifies the position of the register within the CAN object.

5.5 General module registers

5.5.1 Configuring LED status indicators

Name:
CfO_LED0source to CfO_LED7source

These registers can be used to determine the function of the module LED status indicators. This allows application-controlled blink signals to be output or the states of physical inputs and outputs to be displayed.

The following applies:

	Connection	LED
CfO_LED0source	1	Green
CfO_LED1source	1	Orange
...	...	...
CfO_LED6source	4	Green
CfO_LED7source	4	Orange

Data type	Values
USINT	See the bit structure.

Bit structure:

Bit	Description	Value	Information
0 - 3	MODE = 0	0	LED off
		1	Blinking quickly
		2	Blinking
		3	Blinking slowly
		4	Single flash
		5	Double flash
		6 to 15	Reserved
	MODE = 1 (inverted)	0	LED on
		1	Blinking quickly
		2	Blinking
		3	Blinking slowly
		4	Single flash
		5	Double flash
		6 to 15	Reserved
	MODE = 2	0 to 15	Number of the physical input channel
	MODE = 3	0 to 15	Number of the physical output channel
4 - 7	Selection of the mode for the LED status indicator	0	LED blinking pattern
		1	Inverted LED blinking pattern
		2	Displays a channel's physical input status
		3	Displays a channel's physical output status
		4 to 15	Reserved

5.5.2 Status of encoder supplies

Name:
PowerSupply01 to PowerSupply02

This register shows the status of the integrated encoder supplies. A faulty encoder power supply is displayed as a warning.

Data type	Value
USINT	See bit structure.

Bit structure:

Bit	Name	Value	Information
0	PowerSupply01	0	24 VDC encoder power supply OK
		1	24 VDC encoder power supply faulty
1	PowerSupply02	0	5 VDC encoder power supply OK
		1	5 VDC encoder power supply faulty
2 - 7	Reserved	-	

5.6 Digital inputs and outputs

5.6.1 Configure physical channels

Name:
CfO_CFGchannel01 to CfO_CFGchannel15

This register can be used to configure physical I/O channels 1 to 15.

> **Information:**
>
> **CfO_CFGchannel12 is not connected to a physical I/O channel.**

Data type	Values
USINT	See the bit structure.

Bit structure:

Bit	Description	Value	Information
0	Pull[1)]	0	Disabled
		1	Enabled
1	Push[1)]	0	Disabled
		1	Enabled
2	Inverted input	0	Disabled
		1	Enabled
3	Inverted output	0	Disabled
		1	Enabled
4 - 7	Output type	0	Direct I/O
		1 to 5	Reserved
		6	PWM (channel-specific)
		7	Reserved

1) To configure a channel as an output, Push and/or Pull must be enabled.

5.6.2 Reset mask of the digital channels

Name:
CfO_OutClearMask

The settings in this register only affect the values written to register "DigitalOutput xx" on page 42.

- 0 allows manual reset of digital outputs using registers DigitalOutput01 to 15.
- 1 prevents manual reset of digital outputs using registers DigitalOutput01 to 15.

When value "1" is used, the output event function can be used to reset the outputs.

Data type	Values
UINT	See the bit structure.

Bit structure:

Bit	Description	Value	Information
0	DigitalOutput01	0	Writing 0 to register DigitalOutput01 resets the output.
		1	Writing 0 to register DigitalOutput01 does not reset the output.
...	...	...	
10	DigitalOutput11	0	Writing 0 to register DigitalOutput11 resets the output.
		1	Writing 0 to register DigitalOutput11 does not reset the output.
11	Reserved (output 12 does not exist)	-	
12	DigitalOutput13	0	Writing 0 to register DigitalOutput13 resets the output.
		1	Writing 0 to register DigitalOutput13 does not reset the output.
...	...	...	
14	DigitalOutput15	0	Writing 0 to register DigitalOutput15 resets the output.
		1	Writing 0 to register DigitalOutput15 does not reset the output.
15	Reserved	-	

5.6.3 Set mask of the digital channels

Name:
CfO_OutSetMask

The settings in this register only affect the values written to register "DigitalOutput xx" on page 42.

- 0 allows manual setting of digital outputs using registers DigitalOutput01 to 15.
- 1 prevents manual setting of digital outputs using registers DigitalOutput01 to 15.

When value "1" is used, the output event function can be used to set the outputs.

Data type	Values
UINT	See the bit structure.

Bit structure:

Bit	Description	Value	Information
0	DigitalOutput01	0	Writing 1 to register DigitalOutput01 sets the output.
		1	Writing 1 to register DigitalOutput01 does not set the output.
...	...	...	
10	DigitalOutput11	0	Writing 1 to register DigitalOutput11 sets the output.
		1	Writing 1 to register DigitalOutput11 does not set the output.
11	Reserved (output 12 does not exist)	-	
12	DigitalOutput13	0	Writing 1 to register DigitalOutput13 sets the output.
		1	Writing 1 to register DigitalOutput13 does not set the output.
...	...	...	
14	DigitalOutput15	0	Writing 1 to register DigitalOutput15 sets the output.
		1	Writing 1 to register DigitalOutput15 does not set the output.
15	Reserved	-	

5.6.4 Input states of the digital inputs

Name:
DigitalInput1_16
DigitalInput01 to DigitalInput11
DigitalInput13 to DigitalInput15

This register reads the input status of a physical channel. The polarity settings are accounted for in the value (bit 2 in "CfO_CFGchannel[x]" on page 41 register).

Data type	Values
UINT	See the bit structure.

Bit structure:

Bit	Name	Value	Information
0	DigitalInput01	0 or 1	Input state of the physical channel
..	...	...	
10	DigitalInput11	0 or 1	Input state of the physical channel
11	Reserved (input 12 does not exist)	-	
12	DigitalInput13	0 or 1	Input state of the physical channel
...	...	...	
14	DigitalInput15	0 or 1	Input state of the physical channel

5.6.5 Output states of the channels

Name:
DigitalOutput1_16
DigitalOutput01 to DigitalOutput11
DigitalOutput13 to DigitalOutput15

The output state of a physical channel can be written using this register.

Data type	Values
UINT	See the bit structure.

Bit structure:

Bit	Name	Value	Information
0	DigitalOutput01	0 or 1	Output state of the physical channel
..	...	...	
10	DigitalOutput11	0 or 1	Output state of the physical channel
11	Reserved (output 12 does not exist)	-	
12	DigitalOutput13	0 or 1	Output state of the physical channel
...	...	...	
14	DigitalOutput15	0 or 1	Output state of the physical channel

5.6.6 Status of the digital outputs

Name:
StatusDigitalOutput01 to StatusDigitalOutput11
StatusDigitalOutput13 to StatusDigitalOutput15

The state of the output channel passed to the hardware is indicated in this register.

Data type	Values
UINT	See the bit structure.

Bit structure:

Bit	Name	Value	Information
0	StatusDigitalOutput01	0 or 1	State of the hardware output channel
..	...	...	
10	StatusDigitalOutput11	0 or 1	State of the hardware output channel
11	Reserved (output 12 does not exist)	-	
12	StatusDigitalOutput13	0 or 1	State of the hardware output channel
...	...	...	
14	StatusDigitalOutput15	0 or 1	State of the hardware output channel

5.6.7 Input states of the channels

Name:
ComparatorActualValueABConnector01 to ComparatorActualValueABConnector04
ComparatorActualValueCounterConnector01 to ComparatorActualValueCounterConnector04
ComparatorActualValueABRConnector01 and ComparatorActualValueABRConnector03
ReferenceEnableSwitchABRConnector01 and ReferenceEnableSwitchABRConnector03
ComparatorActualValueSSIConnector01 and ComparatorActualValueSSIConnector03

Depending on the function, different names are used for the bits of these registers (see "Input states of the channels" on page 17).

This register is used to read out the input state of a physical channel.

Information:

In Automation Studio, only the BOOL value of the channel set in Studio is returned for each function instead of the entire UINT value.

Data type	Values
UINT	See the bit structure.

Bit structure:

Bit	Name	Value	Information
0	Channel 1	0 or 1	Input state of the physical channel
..			
14	Channel 15	0 or 1	Input state of the physical channel

5.7 Edge events

3 event functions are available for each physical channel:

- Falling edge
- Rising edge
- Falling and rising edge

5.7.1 Generate event on falling edge

Name:
CfO_EdgeDetectFalling

This register defines whether an event is generated on a falling edge.

Data type	Values
UINT	See the bit structure.

Bit structure:

Bit	Description	Value	Information
0	Channel 1	0	No event generated on falling edge.
		1	Events 4096 and 4128 are generated on a falling edge.
...		...	
15	Channel 16	0	No event generated on falling edge.
		1	Events 4111 and 4143 are generated on a falling edge.

5.7.2 Generate event on rising edge

Name:
CfO_EdgeDetectRising

This register defines whether an event is generated on a rising edge.

Data type	Values
UINT	See the bit structure.

Bit structure:

Bit	Description	Value	Information
0	Channel 1	0	No event generated on rising edge.
		1	Events 4112 and 4128 are generated on a rising edge.
...		...	
15	Channel 16	0	No event generated on rising edge.
		1	Events 4127 and 4143 are generated on a rising edge.

5.7.3 Enable limit for falling edges

Name:
CfO_FallingDisProtection

This register can be used to enable or disable the event frequency limitation for falling edges of the corresponding channel.

Data type	Values
UINT	See the bit structure.

Bit structure:

Bit	Description	Value	Information
0	Channel 1	0	Event frequency limit enabled.
		1	Event frequency limit disabled.
...		...	
15	Channel 16	0	Event frequency limit enabled.
		1	Event frequency limit disabled.

5.7.4 Enable limit for rising edges

Name:
CfO_RisingDisProtection

This register can be used to enable or disable the event frequency limitation for rising edges of the corresponding channel.

Data type	Values
UINT	See the bit structure.

Bit structure:

Bit	Description	Value	Information
0	Channel 1	0	Event frequency limit enabled.
		1	Event frequency limit disabled.
...		...	
15	Channel 16	0	Event frequency limit enabled.
		1	Event frequency limit disabled.

5.8 Direct input functions

The module is equipped with 2 "direct input functions".

5.8.1 Configure event ID for input function

Name:
CfO_DIREKTIOevent0IDwr to CfO_DIREKTIOevent1IDwr

The event IDs that trigger the "direct input function" are written to these registers. For a list of all possible event IDs, see "List of event IDs" on page 14.

Data type	Value	Information[1)]
UINT	192 to 7489	ID of the event function Bus controller default setting: 4106

1) The bus controller default value applies only to the register numbers specified in function model 254.

5.8.2 Configure the mode of the input function

Name:
CfO_DIREKTIOevent0mode to CfO_DIREKTIOevent1mode

The mode in which the "direct input function" operates can be set in these registers.

All comparator functions can be operated in 4 different modes. For a description, see "Comparator modes" on page 22.

Data typ	Value	Bus controller default setting[1)]
USINT	See bit structure.	3

1) The bus controller default value applies only to the register numbers specified in function model 254.

Bit structure:

Bit	Description	Value	Information
0 - 1	Comparator mode	0	Off
		1	Individual
		2	State change
		3	Continuous
2 - 7	Reserved	-	

5.8.3 Comparator status for comparator mask

Name:
CfO_DIREKTIOevent0compState to CfO_DIREKTIOevent1compState

This register contains the status bits that are compared with the bits specified in the "CfO_Ev0CompMask" on page 46 register, which contain the I/O input status, when an event is received.

Data type	Values
UINT	See the bit structure.

Bit structure:

Bit	Description	Value	Information
0	Comparator status of channel 1	0 or 1	
...		...	
14	Comparator status of channel 15	0 or 1	

5.8.4 Configure the comparator mask for the input function

Name:
CfO_Ev0CompMask to CfO_Ev1CompMask

If a bit is set, then the input status of the respective channel is compared with that bit in the "CfO_DIREKTIOevent-compState" on page 46 register.

Data type	Values
UINT	See the bit structure.

Bit structure:

Bit	Description	Value	Information
0	Channel 1	0	Do not compare bit
		1	Compare bit in register
...		...	
14	Channel 15	0	Do not compare bit
		1	Compare bit in register

5.9 Direct output functions

The module is equipped with 4 "direct output functions".

5.9.1 Configure event ID for output function

Name:
CfO_DIREKTIOoutevent0IDwr to CfO_DIREKTIOoutevent3IDwr

The event IDs that trigger the "direct output function" are written to these registers. For a list of all possible event IDs, see "List of event IDs" on page 14.

Data type	Value	Information
INT	192 to 7489	ID of event function

5.9.2 Configure channels for resetting

Name:
CfO_DIREKTIOoutclearmask0 to CfO_DIREKTIOoutclearmask3

Writing "1" to the bit position that corresponds to a channel resets the output if the output event function is being executed. This corresponds to writing "0" in register "DigitalOutput" on page 42.

The bit that corresponds to channels that should be reset should be set to "1" in the "CfO_OutClearMask" on page 41 register.

Data type	Values
UINT	See the bit structure.

Bit structure:

Bit	Description	Value	Information
0	Channel 1	0	Reset channel 1
		1	Do not reset channel 1
...		...	
14	Channel 15	0	Reset channel 15
		1	Do not reset channel 15
15	Reserved	-	

5.9.3 Configure channels for setting

Name:
CfO_DIREKTIOoutsetmask0 to CfO_DIREKTIOoutsetmask3

Writing "1" to the bit position that corresponds to a channel sets the output if the output event function is being executed. This corresponds to writing "1" in register "DigitalOutput" on page 42.

The bit that corresponds to channels that should be reset should be set to "1" in the "CfO_OutSetMask" on page 42 register.

Data type	Values
UINT	See the bit structure.

Bit structure:

Bit	Description	Value	Information
0	Channel 1	0	Set channel 1
		1	Do not set channel 1
...		...	
14	Channel 15	0	Set channel 15
		1	Do not set channel 15
15	Reserved	-	

5.10 Counters and encoders

The module is equipped with 8 internal counter functions with 2 counter registers each. Each of these 8 counters is permanently assigned to 2 physical inputs. This assignment cannot be changed.

5.10.1 Counter event functions

Each of the 8 counter functions has 2 counter event functions.

5.10.1.1 Configure counter mode

Name:
CfO_Counter1config to CfO_Counter8config

The counting mode for the counter function can be configured in these registers. Each counter function can be operated in 3 different modes (see "Counters and encoders" on page 19).

Data type	Values	Bus controller default setting[1)]
USINT	See bit structure.	CfO_Counter**N**config N(1,2,3,5): 1 N(4): 0

1) The bus controller default value applies only to the register numbers specified in function model 254.

Bit structure:

Bit	Description	Value	Information
0 - 1	Counter mode	00	Edge counter (bus controller default setting N(4))
		01	AB counter (bus controller default setting (N(1,2,3,5))
		11	Up/Down counter
2 - 7	Reserved	-	

5.10.1.2 Configure calculation of internal counters

Name:
CfO_Counter1configReg0 to CfO_Counter8configReg0 ("counter1")
CfO_Counter1configReg1 to CfO_Counter8configReg1 ("counter2")

The calculation of internal registers "counter1" and "counter2" can be configured in these registers. For information about using these internal registers, see "Counter value calculation" on page 20.

Data type	Values	Bus controller default setting[1)]
USINT	See the bit structure.	CfO_Counter**N**configReg0 N(1,2,3,5): 13 N(4): 0 CfO_Counter**N**configReg1 N(1,2,3,5): 0 N(0): 4

1) The bus controller default value applies only to the register numbers specified in function model 254.

Bit structure:

Bit	Description	Value	Information
0	counter1 - Use	0	0 is added instead of register "counter1".
		1	"counter1" is used for addition.
1	counter1 - Sign	0	The sign of register "counter1" is not changed for addition.
		1	The sign of register "counter1" is reversed for addition.
2	counter2 - Use	0	0 is added instead of register "counter2".
		1	"counter2" is used for addition.
3	counter2 - Sign	0	The sign of register "counter2" is not changed for addition.
		1	The sign of register "counter2" is reversed for addition.
4 - 7	Reserved	-	

Examples of calculation configurations

0b00000001	= 0x01	Only the "counter1 - use" bit is set, entering the contents of the "counter" (edge of counter event channel 1) directly in the counter register.
0b00000011	= 0x03	"counter 1 - use" and "counter1 - sign" bits are set. The sign is changed so that the counter register counts in the negative direction.
0b00001101	= 0x0d	Edges on counter input channel 1 increase the value in the counter register. Edges on counter input channel 2 decrease the value in the counter register. This value is the best setting for modes "AB counter" and "Up/Down counter".

5.10.1.3 Offset value for referencing

Name:

Function model 0
CfO_Counter1PresetValue1 to CfO_Counter8PresetValue1 (SW_reference_counter1)
CfO_Counter1PresetValue2 to CfO_Counter8PresetValue2 (SW_reference_counter2)

Function model 1
CfO_Counter1PresetValue1_32Bit to CfO_Counter8PresetValue1_32Bit (SW_reference_counter1)
CfO_Counter1PresetValue2_32Bit to CfO_Counter8PresetValue2_32Bit (SW_reference_counter2)

Function model 2
CfO_Counter5PresetValue1 and CfO_Counter7PresetValue1 (SW_reference_counter1)
CfO_Counter5PresetValue2 and CfO_Counter7PresetValue2 (SW_reference_counter2)

Function model 0 - Standard and function model 1 - Standard with 32-bit encoder counter value

These registers can be used to define an offset value for referencing. This value is copied to internal register SW_reference_counter of the corresponding counter register.

Data type	Values	Information[1)]
INT	-32768 to 32767	Bus controller default setting: 0
DINT	-2,147,483,648 to 2,147,483,647	

1) The bus controller default value applies only to the register numbers specified in function model 254.

Function model 2 - MotionConfiguration

The registers for counters 5 and 7 are set to 0 by default in function model MotionConfiguration and cannot be configured.

5.10.1.4 Counter registers

Name:
ABConnector01 to ABConnector04
CounterConnector01 to CounterConnector04
EventCounter01 to EventCounter15
ABRConnector01 and ABRConnector03

Different names are used for these registers depending on the function (see "Counters and encoders" on page 19).

The result of the counter value calculation for the respective register is indicated in these 16 registers. Depending on the function, this corresponds to either the encoder position or the counter value.

For information about the correlation between physical channels and counter registers, see "Counters and encoders" on page 19 and "Description of channel assignments" on page 12.

Data type	Value	Information
INT	-32768 to 32767	Encoder position or counter value
DINT[1)]	-2,147,483,648 to 2,147,483,647	Encoder position or counter value

1) Only in function model 1

5.10.1.5 Status of the ABR encoder

Name:
StatusABRConnector01 to StatusABRConnector02

The referencing status of the ABR encoder is indicated in this register.

Data type	Values
USINT	See the bit structure.

Bit structure:

Bit	Description	Value	Information
0 - 1	Reserved	0	
2	Bit is always 1 after the first reference pulse.	0	No reference pulses have occurred since the start of referencing.
		1	The first reference pulse has occurred.
3	State change when referencing is complete	0 or 1	State change when referencing is complete
4	Bit is always 1 after the first reference pulse.	0	No reference pulses have occurred since the start of referencing.
		1	The first reference pulse has occurred.
5 - 7	Continuous counter	xxx	Increased with each reference pulse

Examples of possible values

0b00000000	= 0x00	Referencing OFF or homing procedure already active
0b00111100	= 0x3C	First reference complete, reference value applied in the "ABREncoder0" on page 49 register
0bxxx11100	= 0xxB	Bits 5 to 7 are changed with each reference pulse
0bxxx1x100	= 0xxx	Bits changed continuously with the setting continuous referencing. With every reference pulse, the reference value is applied to the "ABREncoder0" on page 49 register

5.10.1.6 Configure ABR referencing mode

Name:
ReferenceModeABRConnector01 and ReferenceModeABRConnector03

The bits in this register are used to configure the reaction to the configured reference pulse.

Data type	Values
USINT	See the bit structure.

Bit structure:

Bit	Description	Value	Information
0 - 1	Sets the referencing mode	00	Referencing OFF
		01	Single-shot referencing
		10	Reserved
		11	Continuous referencing
2 - 5	Reserved	-	
6 - 7	Reserved	11	Must always be 11!

This results in the following values:

0b00000000	= 0x00	Referencing OFF
0b11000001	= 0xC1	Single-shot referencing →When starting over after the referencing process is complete, the value 0x00 must be written to start again. Wait until the "StatusABR" on page 49 register also takes on the value 0x00, then the value 0xC1 can be written again.
0b11000011	= 0xC3	Continuous referencing → Referencing takes place automatically with every reference pulse

5.10.2 Comparator functions

The AB, ABR and up/down counters have a comparator function.

5.10.2.1 Configure event ID for comparator

Name:
CfO_Counter1event0IDwr to CfO_Counter8event0IDwr (event function 1)
CfO_Counter1event1IDwr to CfO_Counter8event1IDwr (event function 2)

The event IDs that the counter event function should trigger are written to these registers. For a list of all possible event IDs, see "List of event IDs" on page 14.

Data type	Value	Information
UINT	192 to 7489	ID of the counter event function. Bus controller default setting: 513

1) The bus controller default value applies only to the register numbers specified in function model 254.

5.10.2.2 Configure calculation of comparator

Name:
CfO_Counter1event0config to CfO_Counter8event0config (event function 1)
CfO_Counter1event1config to CfO_Counter8event1config (event function 2)

These registers are used to configure the counter event function for the respective counter function.

Bits 0 to 3 configure the calculation of the comparison or latch the value used. This calculation is analogous to the calculation of the counter registers (see "Counter value calculation" on page 20).

Bits 8 to 13 can be used to limit the number of bits used for the comparison. A mask is calculated as 2^n - 1 and linked with an "AND" operation. This makes it possible to generate a comparator pulse every 2^n increments.

Data type	Values	Bus controller default setting[1)]
UINT	See bit structure.	0

1) The bus controller default value applies only to the register numbers specified in function model 254.

Bit structure:

Bit	Description	Value	Information
0	counter 1 - use	0	0 is added instead of "counter 1"
		1	"counter 1" is used for addition
1	counter 1 - sign	0	The sign of the "counter 1" register is not changed for addition
		1	The sign of the "counter 1" register is reversed for addition
2	counter 2 - use	0	0 is added instead of register "counter2".
		1	"counter 2" is used for addition
3	counter 1 - sign	0	The sign of the "counter 2" register is not changed for addition
		1	The sign of the "counter 2" register is reversed for addition
4 - 7	Reserved	-	
8 - 13	Number of bits for the comparator mask	x	The mask value is calculated as 2^n-1, where n is value set in these bits.
14	Reserved	-	
15	Margin comparator mode	0	MarginComparator ≥ (Current position - OriginComparator)
		1	MarginComparator > (Current position - OriginComparator)

5.10.2.3 Configure mode and latching of comparator function

Name:
CfO_Counter1event0mode to CfO_Counter8event0mode (event function 1)
CfO_Counter1event1mode to CfO_Counter8event1mode (event function 2)

In these registers you can set the mode for the comparator function and optional copying of the latched registers.

All comparator functions can be operated in 4 different modes. For a description, see "Comparator modes" on page 22.

Bits 4 to 7 can be used to define hardware referencing actions.

For each counter event, the counter value of internal absolute value counters "abs1" or "abs2" can be applied to the respective "HW_reference_counter" register according to these bits (see "Counter value calculation" on page 20). This is intended for direct hardware referencing of the counter values.

Data type	Values
USINT	See the bit structure.

Bit structure:

Bit	Description	Value	Information
0 - 1	Comparator mode	0	Off
		1	Individual
		2	State change
		3	Continuous
2 - 3	Reserved	-	
4	Copy abs1 counter value	0	No action
		1	For FALSE event → Hardware reference counter 1 = abs1
5	Copy abs2 counter value	0	No action
		1	For FALSE event → Hardware reference counter 2 = abs2
6	Copy abs1 counter value	0	No action
		1	For TRUE event → Hardware reference counter 1 = abs1
7	Copy abs2 counter value	0	No action
		1	For TRUE event → Hardware reference counter 2 = abs2

5.10.2.4 Width of the comparator

Name:
MarginComparatorABConnector01 to MarginComparatorABConnector04
MarginComparatorABRConnector01 and MarginComparatorABRConnector03
MarginComparatorCounterConnector01 to MarginComparatorCounterConnector04

This register is available for the comparator function of the AB/ABR encoder and up/down counter.

It defines the width of the comparator window in the positive direction.

Data type	Value	Information
INT	-32768 to 32767	Width of comparator window, 16-bit
DINT	-2,147,483,648 to 2,147,483,647	Width of comparator window, 32-bit

5.10.2.5 Comparator origin

Name:
OriginComparatorABConnector01 to OriginComparatorABConnector04
OriginComparatorABRConnector01 and OriginComparatorABRConnector03
OriginComparatorCounterConnector01 to OriginComparatorCounterConnector04

This register is available for the comparator function of the AB/ABR encoder and up/down counter.

It defines the position value at which the respective configured comparator output channel is set.

Data type	Value	Information
INT	-32768 to 32767	Comparator window origin, 16-bit
DINT	-2,147,483,648 to 2,147,483,647	Comparator window origin, 32-bit

5.10.2.6 Read latch position or counter value

Name:
Latch01ABConnector01 to Latch01ABConnector04 (event function 1)
Latch02ABConnector01 to Latch02ABConnector04 (event function 2)
Latch01ABRConnector01 and Latch01ABRConnector03
Latch01CounterConnector01 and Latch01CounterConnector04 (event function 1)
Latch02CounterConnector01 and Latch02CounterConnector04 (event function 2)

Different names are used for these registers depending on the function (see "Latch function" on page 23).

If the comparator returns TRUE, then the current counter value is latched and copied to these registers. The calculation of the comparator value used for the latch can be configured in register "CfO_Counter[x]event[y]config" on page 51.

Data type	Value	Information
INT	-32768 to 32767	Latched encoder position or counter value
DINT[1)]	-2,147,483,648 to 2,147,483,647	Latched encoder position or counter value

1) Only in function model 1

5.11 SSI encoder interface

The module provides 2 SSI encoders that are directly supported by the hardware. 2 5 V output channels are permanently set for each SSI encoder and cannot be modified.

5.11.1 SSI event functions

5.11.1.1 Configure event ID for SSI

Name:
CfO_SSI1eventIDwr to CfO_SSI2eventIDwr

The event IDs that should trigger the SSI cycle are written to these registers. For a list of all possible event IDs, see "List of event IDs" on page 14.

Data type	Value	Information[1)]
UINT	192 to 7489	ID of the event function Bus controller default setting: 225

1) The bus controller default value applies only to the register numbers specified in function model 254.

5.11.1.2 Configure SSI

Name:
CfO_SSI1cfg to CfO_SSI2cfg

This configuration register sets the encoding, clock rate and number of bits.

Data type	Values
UINT	See the bit structure.

Bit structure:

Bit	Description	Value	Information
0 - 5	SSI value valid bits	x	
6 - 7	Clock rate	00	1 MHz
		01	500 kHz
		10	250 kHz
		11	125 kHz
8 - 13	SSI number of bits	x	Number of bits including leading zeros
14	Reserved	0	
15	Keying	0	Binary encoding
		1	Gray encoding

5.11.1.3 SSI advanced configuration

Name:
ConfigAdvanced01 to ConfigAdvanced02

This configuration register is used to set the encoding, clock rate, bit count and monostable multivibrator check settings.

It only differs from "CfO_SSI1cfg" on page 53 by data length and additional monostable multivibrator testing.

Data type	Value	Bus controller default setting[1)]
UDINT	See bit structure.	0x10000

1) The bus controller default value applies only to the register numbers specified in function model 254.

Bit structure:

Bit	Name	Value	Information
0 - 5	SSI value valid bits	x	Bus controller default setting: 0
6 - 7	Clock rate	00	1 MHz (bus controller default setting)
		01	500 kHz
		10	250 kHz
		11	125 kHz
8 - 13	SSI number of bits	x	Number of bits including leading zeros Bus controller default setting: 0
14	Reserved	0	
15	Encoding	0	Binary encoding (bus controller default setting)
		1	Gray encoding
16 - 17	Monostable multivibrator check	00	Check OFF, no additional clock bit
		01	Check set to high level (bus controller default setting)
		10	Check set to low level
		11	Level is clocked but ignored
18 - 31	Reserved	0	

5.11.1.4 Enable SSI event function

Name:
CfO_SSI1control to CfO_SSI2control

The 2 "SSI encoder events" on page 24 can be enabled/disabled using this register.

Data type	Values
USINT	See the bit structure.

Bit structure:

Bit	Description	Value	Information
0	Event: "SSI valid"	0	Not transmitted
		1	Sent
1	Event: "SSI ready"	0	Not sent
		1	Sent
2 - 7	Reserved	-	

5.11.1.5 Read SSI position

Name:
SSIConnector01 and SSIConnector03

The last transferred SSI position can be read out from this register. The SSI encoder value is displayed as a 32-bit position value. This position value is calculated synchronously with the X2X cycle.

Data type	Value	Information
UDINT	0 to 4,294,967,295	Last SSI position transferred

5.11.2 SSI comparator condition

The module has an assigned comparator function for the SSI function. These consist of:

- Event ID that triggers the comparator function
- The window comparator
- Latch register for saving the counter value

After the comparator function has been completed, event ID 7232 to 7489 (see "List of event IDs" on page 14) is transmitted.

Window comparator

All comparator functions can be operated in 4 different modes. For a description, see "Comparator modes" on page 22.

Value	Information
0	Off
1	Individual
2	State change
3	Continuous

Performing the calculation

The position value used for the comparison is calculated as follows:

```
counter_window_value = ssi_counter & (2^ssi_data_bits - 1)
diff = counter_window_value - origin_comparator
if ((diff & (2^(comparator_mask)-1)) <= margin_comparator)
condition = True;
else
condition = False;
```

Latch function

If the comparison of the SSI window comparator returns "TRUE", the current SSI position is latched and saved.

5.11.2.1 Configure event ID for SSI comparator

Name:
CfO_SSI1event0IDwr to CfO_SSI2event0IDwr

The event IDs that should trigger the SSI comparator function are written to these registers. For a list of all possible event IDs, see "List of event IDs" on page 14.

Data type	Value	Information
INT	192 to 7489	ID of comparator function

5.11.2.2 Configure the mode of the SSI comparator function

Name:
CfO_SSI1event0mode to CfO_SSI2event0mode

The mode of the comparator function can be set in these registers.

All comparator functions can be operated in 4 different modes. For a description, see "Comparator modes" on page 22.

Data type	Values	
USINT	See the bit structure.	

Bit structure:

Bit	Description	Value	Information
0 - 1	Comparator mode	0	Off
		1	Individual
		2	State change
		3	Continuous
2 - 7	Reserved	-	

5.11.2.3 Configure calculation of SSI comparator

Name:
CfO_SSI1event0config and CfO_SSI2event0config

The position value used for calculating the comparison is configured in this register.

Data type	Values
UINT	See the bit structure.

Bit structure:

Bit	Description	Value	Information
0 - 5	SSI data bits	x	Number of data bits used for masking
6 - 7	Reserved	-	
8 - 13	Comparator mask	x	The mask value is calculated from 2^n-1, where n is the value configured in SSI data bits. Default: 0
14	Comparator mode	0	MarginComparator ≥ SSI position - OriginComparator
		1	MarginComparator > SSI position - OriginComparator

5.11.2.4 Origin of the SSI comparator

Name:
OriginComparatorSSIConnector01 and OriginComparatorSSIConnector03

This register contains the origin of the window comparator.

Data type	Value	Information
UDINT	0 to 4,294,967,295	Origin of the window comparator.

5.11.2.5 Width of the SSI comparator

Name:
MarginComparatorSSIConnector01 and MarginComparatorSSIConnector03

This register provides the width of the window comparator.

Data type	Value	Information
UDINT	0 to 4,294,967,295	Width of the SSI window comparator

5.11.2.6 Read SSI latch position

Name:
Latch01SSIConnector01 and Latch01SSIConnector03

If the SSI window comparator returns "True", then the current SSI position is latched and saved in this register.

Data type	Value	Information
UDINT	0 to 4,294,967,295	Latched SSI position

5.12 PWM - Pulse width modulation

The module provides 2 PWM functions that are directly supported by the hardware. One 24 V output channel is permanently set for each PWM function and cannot be modified.

5.12.1 Configure PWM prescaler

Name:
CfO_PWM0prescaler to CfO_PWM1prescaler

This register is used to set the length of the PWM cycle.

Data type	Value	Information[1)]
UINT	2 to 65535	Prescaler for PWM cycle. Bus controller default setting: 480

1) The bus controller default value applies only to the register numbers specified in function model 254.

5.12.2 Output PWM values

Name:
PWMOutput03, PWMOutput07

This register is used to set the proportion in 1/10% steps of the PWM cycle for which the PWM output is switched to logical 1. Logical 1 means that the PWM output is switched on.

Data type	Value	Information
UINT	0	PWM output always off
	1 to 999	Switch-on time in 1/10% increments
	1000	PWM output always on

5.13 Time measurement function

The module has a time measurement function for each I/O channel. It can be configured separately for rising and falling edges on each channel.

5.13.1 Enable time measurement function

Name:
CfO_EdgeTimeglobalenable

This register is used to enable or disable the time measurement function for the entire module.

Data type	Values
USINT	See the bit structure.

Bit structure:

Bit	Description	Value	Information
0	Time measurement function	0	Disabled for entire module
		1	Enabled for entire module
1 - 7	Reserved	-	

5.13.2 Configure time measurement function for the falling edge

Name:
CfO_EdgeTimeFallingMode01 to CfO_EdgeTimeFallingMode15

These registers can be used to configure the time measurement function for the falling edge of the respective channel.

Data type	Values
UINT	See the bit structure.

Bit structure:

Bit	Description	Value	Information
0 - 3	Selects the channel for the starting edge	0	Channel 1
		...	
		14	Channel 15
4	Selects the edge for the starting edge	0	The falling edge of the channel configured in bits 0 to 3 serves as the starting edge.
		1	The rising edge of the channel configured in bits 0 to 3 serves as the starting edge.
5 - 6	Reserved	-	
7	Trigger	0	Triggered[1)]
		1	Continuous[2)]
8 - 11	Previous start edge	0 to 15	The value determines which entry in the starting edge FIFO should be used to calculate the time difference.
12 - 15	Time measurement resolution	0	8 MHz
		1	4 MHz
		2	2 MHz
		3	1 MHz
		4	500 kHz
		5	250 kHz
		6	125 kHz
		7	62.5 kHz

1) The time measurement is triggered by the corresponding bit in register "TriggerFallingCH" on page 58.
2) Time measurement runs continuously and is triggered at every edge.

5.13.3 Configure time measurement function for the rising edge

Name:
CfO_EdgeTimeRisingMode01 to CfO_EdgeTimeRisingMode15

These registers can be used to configure the time measurement function for the rising edge of the respective channel.

Data type	Values
UINT	See the bit structure.

Bit structure:

Bit	Description	Value	Information
0 - 3	Selects the channel for the starting edge	0	Channel 1
		...	
		14	Channel 15
4	Selects the edge for the starting edge	0	The falling edge of the channel configured in bits 0 to 3 serves as the starting edge.
		1	The rising edge of the channel configured in bits 0 to 3 serves as the starting edge.
5 - 6	Reserved	-	
7	Trigger	0	Triggered[1)]
		1	Continuous[2)]
8 - 11	Previous start edge	0 to 15	The value determines which entry in the starting edge FIFO should be used to calculate the time difference.
12 - 15	Time measurement resolution	0	8 MHz
		1	4 MHz
		2	2 MHz
		3	1 MHz
		4	500 kHz
		5	250 kHz
		6	125 kHz
		7	62.5 kHz

1) The time measurement is triggered by the corresponding bit in the "TriggerRisingCH" on page 58 register.
2) Time measurement runs continuously and is triggered at every edge.

5.13.4 Trigger falling edge detection

Name:
1: TriggerFallingCH01 to TriggerFallingCH08
2: TriggerFallingCH09 to TriggerFallingCH15

If bit 7 "Trigger" is cleared in the "CfO_EdgeTimeFallingMode" on page 57 register, then detection of a falling edge on the respective input can be triggered using the respective bit in this register. After a bit has been set, the next falling edge on the corresponding channel is detected.

Data type	Values
USINT	See the bit structure.

Bit structure:

Bit	Description	Value	Information
0	1: TriggerFallingCH01 2: TriggerFallingCH09	0	Falling edges on the channel are not detected.
		1	The next falling edge on the channel will be detected.
...		...	
6	1: TriggerFallingCH07 2: TriggerFallingCH15	0	Falling edges on the channel are not detected.
		1	The next falling edge on the channel will be detected.
7	1: TriggerFallingCH08 2: Reserved	0	Falling edges on the channel are not detected.
		1	The next falling edge on the channel will be detected.

5.13.5 Trigger rising edge detection

Name:
1: TriggerRisingCH01 to TriggerRisingCH08
2: TriggerRisingCH09 to TriggerRisingCH15

If bit "Continued/Triggered" in register "CfO_EdgeTimeRisingMode" on page 57 is cleared, then detection of a rising edge on the respective input can be triggered using the respective bit in this register. After a bit has been set, the next rising edge on the corresponding channel is detected.

Data type	Values
USINT	See the bit structure.

Bit structure:

Bit	Description	Value	Information
0	1: Trigger rising edge - Channel 01 2: Trigger rising edge - Channel 09	0	Rising edges on the channel are not detected.
		1	The next rising edge on the channel will be detected.
...		-	
6	1: Trigger rising edge - Channel 07 2: Trigger rising edge - Channel 15	0	Rising edges on the channel are not detected.
		1	The next rising edge on the channel will be detected.
7	1: Trigger rising edge - Channel 08 2: Reserved	0	Rising edges on the channel are not detected.
		1	The next rising edge on the channel will be detected.

5.13.6 Show first falling trigger edge

Name:
1: BusyTriggerFallingCH01 to BusyTriggerFallingCH08
2: BusyTriggerFallingCH09 to BusyTriggerFallingCH15

If edges are triggered via the bits in the "TriggerFallingCH" on page 58 register, then a set bit in this register indicates that no falling edges have been detected on the respective channel since the corresponding bit was set in the "TriggerFallingCH" register. If a falling edge occurs on the respective channel, then the corresponding BusyTriggerFalling bit is cleared.

Data type	Values
USINT	See the bit structure.

Bit structure:

Bit	Description	Value	Information
0	1: BusyTriggerFallingCH01 2: BusyTriggerFallingCH01	0	A falling edge was detected on the channel.
		1	The module is waiting for a falling edge on the channel.
...		...	
	1: BusyTriggerFallingCH07 2: BusyTriggerFallingCH15	0	A falling edge was detected on the channel.
		1	The module is waiting for a falling edge on the channel.
7	1: BusyTriggerFallingCH08 2: Reserved	0	A falling edge was detected on the channel.
		1	The module is waiting for a falling edge on the channel.

5.13.7 Show first rising trigger edge

Name:
1: BusyTriggerRisingCH01 to BusyTriggerRisingCH08
2: BusyTriggerRisingCH09 to BusyTriggerRisingCH15

If edges are triggered via the bits in the "TriggerRisingCH" on page 58 register, then a set bit in this register indicates that no rising edges have been detected on the respective channel since the corresponding bit was set in the "TriggerRisingCH" register. If a rising edge occurs on the respective channel, then the corresponding BusyTriggerRising bit is cleared.

Data type	Values
USINT	See the bit structure.

Bit structure:

Bit	Description	Value	Information
0	1: BusyTriggerRisingCH01 2: BusyTriggerRisingCH09	0	A rising edge was detected on the channel.
		1	The module is waiting for a rising edge on the channel.
...		...	
6	1: BusyTriggerRisingCH07 2: BusyTriggerRisingCH15	0	A rising edge was detected on the channel.
		1	The module is waiting for a rising edge on the channel.
7	1: BusyTriggerRisingCH08 2: Reserved	0	A rising edge was detected on the channel.
		1	The module is waiting for a rising edge on the channel.

5.13.8 Count falling trigger edges

Name:
CountFallingCH01 to CountFallingCH15

These registers contain cyclic counters that are incremented with each falling edge detected on the respective channel.

Data type	Value	Information
USINT	0 to 255	Counter for falling edges

5.13.9 Count rising trigger edges

Name:
CountRisingCH01 to CountRisingCH15

These registers contain cyclic counters that are incremented with each rising edge detected on the respective channel.

Data type	Value	Information
USINT	0 to 255	Counter for rising edges

5.13.10 Timestamp of falling edge

Name:
TimeStampFallingCH01 to TimeStampFallingCH15

When a falling edge occurs on the respective channel, the current counter value of the module timer is copied to these registers.

Data type	Value	Information
UINT	0 to 65535	Timestamp for rising edges

5.13.11 Timestamp of the rising edge

Name:
TimeStampRisingCH01 to TimeStampRisingCH15

When a rising edge occurs on the respective channel, the current counter value of the module timer is copied to these registers.

Data type	Value	Information
UINT	0 to 65535	Timestamp for rising edges

5.13.12 Time difference of falling edge

Name:
TimeDiffFallingCH01 to TimeDiffFallingCH15

When a falling edge occurs on the respective channel, the time difference compared to the starting edge configured in bit 4 of the "CfO_EdgeTimeFallingMode" on page 57 register is copied to this register.

Data type	Value	Information
UINT	0 to 65535	Time difference from starting edge

5.13.13 Time difference of rising edge

Name:
TimeDiffRisingCH01 to TimeDiffRisingCH15

When a rising edge occurs on the respective channel, the time difference compared to the starting edge configured in bit 4 of the "CfO_EdgeTimeRisingMode" on page 57 register is copied to this register.

Data type	Value	Information
UINT	0 to 65535	Time difference from starting edge

5.14 Minimum cycle time

The minimum cycle time specifies how far the bus cycle can be reduced without communication errors occurring. It is important to note that very fast cycles reduce the idle time available for handling monitoring, diagnostics and acyclic commands.

Minimum cycle time
150 µs

5.15 Minimum I/O update time

The minimum I/O update time specifies how far the bus cycle can be reduced so that an I/O update is performed in each cycle.

Minimum I/O update time
150 µs