NORGREN EXCELON® MODULAR SYSTEM ACCESSORIES

SYSTEM ACCESSORIES Start at $1.70

RoHS UL

- **For use with Excelon 72, 73 and 74 Series Filters, Regulators and Lubricators**

Mounting bracket

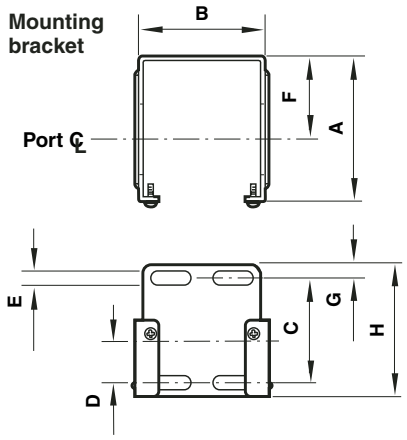

Wall mounting bracket (bracket only)

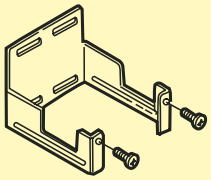

Neck mounting bracket

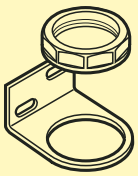

Panel nut



Quick fill nipple



Gage 0...160 psig

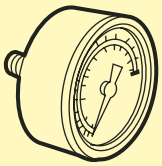

All products listed on next page.

Pipe adapters (quantity of 1) (NPT)

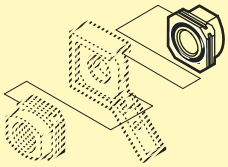

Quickclamp®

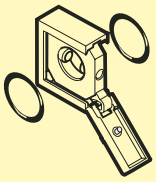

Quickclamp® and wall bracket

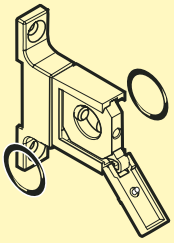

SERIES mm (in)	A	B	C	D	E	F	G	H
72	60 (2.36)	42 (1.65)	39 (1.54)	19 (0.73)	4 (0.16)	38 (1.50)	6 (0.24)	51 (2.01)
73	67 (2.64)	60 (2.36)	48 (1.89)	19 (0.75)	7 (0.28)	38 (1.50)	6 (0.24)	61 (2.40)
74	79 (3.11)	69 (2.72)	50 (1.97)	20 (0.79)	5 (0.20)	51 (2.01)	6 (0.24)	61 (2.40)

Neck mounting brackets

R72

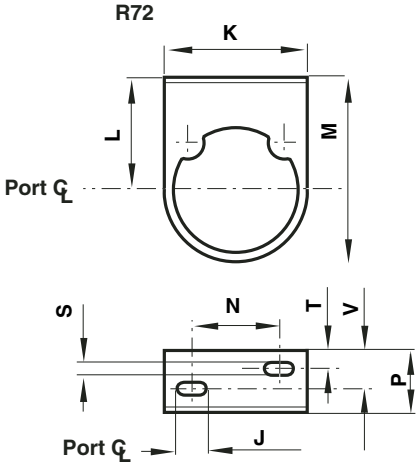

R73

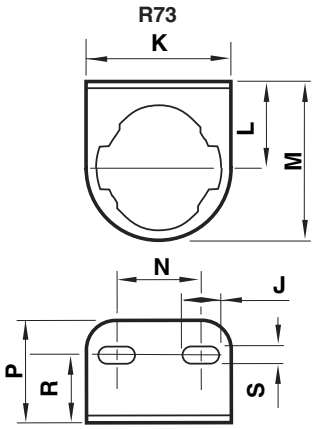

R74

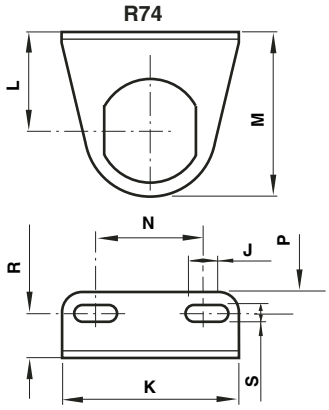

SERIES mm (in)	J	K	L	M	N	P	R	S	T	V
72	8 (0.31)	49 (1.93)	38 (1.50)	64 (2.50)	30 (1.18)	24 (0.94)	-	6 (0.24)	8 (0.31)	15 (0.59)
73	17 (0.67)	64 (2.52)	38 (1.50)	70 (2.76)	38 (1.50)	38 (1.50)	25 (0.98)	7 (0.28)	-	-
74	24 (0.94)	89 (3.50)	52 (2.05)	86 (3.39)	56 (2.20)	35 (1.38)	23 (0.91)	7 (0.28)	-	-

To Order *(Specify Model Number)*

MOST POPULAR MODELS HIGHLIGHTED!

MODEL NO.	PRICE	FILTERS							REGULATORS, FILTER/REGULATORS							LUBRICATORS						
		F72		F73			F74		B72, R72		B73, R73			B74, R74		L72		L73			L74	
		PORT							PORT							PORT						
		1/4"	3/8"	1/4"	3/8"	1/2"	3/8"	1/2"	1/4"	3/8"	1/4"	3/8"	1/2"	3/8"	1/2"	1/4"	3/8"	1/4"	3/8"	1/2"	3/8"	1/2"
WALL BRACKETS																						
OM-AIR-4224-50	$6.50	•							•							•						
OM-AIR-4424-50	7.00				•							•							•			
OM-AIR-4324-50	8.50						•							•							•	
OM-AIR-4323-51	8.45																					•
QUICKMOUNT PIPE ADAPTORS																						
OM-AIR-4215-02	$6.80	•							•							•						
OM-AIR-4215-03	6.80		•							•							•					
OM-AIR-4315-01	9.35			•							•							•				
OM-AIR-4315-02	9.35				•		•					•		•					•		•	
OM-AIR-4315-03	9.35					•		•					•		•					•		•
QUICKCLAMP																						
OM-AIR-4214-51	$5.65	•							•							•						•
OM-AIR-4314-51	7.00				•		•					•		•					•			•
QUICKCLAMP WITH WALL BRACKET																						
OM-AIR-4214-52	$7.60	•							•							•						
OM-AIR-4213-89	1.95		•							•							•					
OM-AIR-4313-50	3.75				•			•				•			•				•			•
OM-AIR-4314-52	10.70			•			•				•			•				•			•	
REPLACEMENT ELEMENTS																						
OM-AIR-5925-09	$36.80																					
OM-AIR-4444-01	40.35																					
OM-AIR-4344-01	43.65																					
NECK MOUNTING BRACKETS																						
OM-AIR-74316-50	$5.65								•													
OM-AIR-4461-50	6.45										•											
OM-AIR-4368-51	12.10																					
PANEL NUT																						
OM-AIR-4248-89	$1.70								•													
OM-AIR-5191-88	4.25										•											
OM-AIR-4348-89	3.65																					
GAGES																						
OM-AIR-18-013-212	$12.15								•													
OM-AIR-18-013-209	12.15										•			•								
REMOTE FILL KIT																						
OM-AIR-5335-50	$128.80																					•
QUICK FILL NIPPLE																						
OM-AIR-18-011-024	$9.40																		•			•
TAMPER RESISTANT SNAP-ON CAP FOR LUBRICATOR SIGHT FEED DOME#																						
OM-AIR-4050-89	$1.70															•			•			•
LEVEL SWITCH																						
OM-AIR-18-023-610	$333.20																					•

Ordering Example: *OM-AIR-4224-50, Wall bracket,* ***$6.50***

omega.com®

Your One-Stop Source for Process Measurement and Control!

One Omega Drive | Stamford, CT 06907 | 1-888-TC-OMEGA (1-888-826-6342) | info@omega.com

www.omega.com

UNITED STATES
www.omega.com
1-800-TC-OMEGA
Stamford, CT.

CANADA
www.omega.ca
Laval(Quebec)
1-800-TC-OMEGA

GERMANY
www.omega.de
Deckenpfronn, Germany
0800-8266342

UNITED KINGDOM
www. omega.co.uk
Manchester, England
0800-488-488

FRANCE
www.omega.fr
Guyancourt, France
088-466-342

CZECH REPUBLIC
www.omegaeng.cz
Karviná, Czech Republic
596-311-899

BENELUX
www.omega.nl
Amstelveen, NL
0800-099-33-44



More than 100,000 Products Available!

• Temperature

Calibrators, Connectors, General Test and Measurement Instruments, Glass Bulb Thermometers, Handheld Instruments for Temperature Measurement, Ice Point References, Indicating Labels, Crayons, Cements and Lacquers, Infrared Temperature Measurement Instruments, Recorders Relative Humidity Measurement Instruments, RTD Probes, Elements and Assemblies, Temperature & Process Meters, Timers and Counters, Temperature and Process Controllers and Power Switching Devices, Thermistor Elements, Probes and Assemblies, Thermocouples Thermowells and Head and Well Assemblies, Transmitters, Wire

• Flow and Level

Air Velocity Indicators, Doppler Flowmeters, Level Measurement, Magnetic Flowmeters, Mass Flowmeters, Pitot Tubes, Pumps, Rotameters, Turbine and Paddle Wheel Flowmeters, Ultrasonic Flowmeters, Valves, Variable Area Flowmeters, Vortex Shedding Flowmeters

• pH and Conductivity

Conductivity Instrumentation, Dissolved Oxygen Instrumentation, Environmental Instrumentation, pH Electrodes and Instruments, Water and Soil Analysis Instrumentation

• Data Acquisition

Auto-Dialers and Alarm Monitoring Systems, Communication Products and Converters, Data Acquisition and Analysis Software, Data Loggers Plug-in Cards, Signal Conditioners, USB, RS232, RS485 and Parallel Port Data Acquisition Systems, Wireless Transmitters and Receivers

• Pressure, Strain and Force

Displacement Transducers, Dynamic Measurement Force Sensors, Instrumentation for Pressure and Strain Measurements, Load Cells, Pressure Gauges, Pressure Reference Section, Pressure Switches, Pressure Transducers, Proximity Transducers, Regulators, Strain Gages, Torque Transducers, Valves

• Heaters

Band Heaters, Cartridge Heaters, Circulation Heaters, Comfort Heaters, Controllers, Meters and Switching Devices, Flexible Heaters, General Test and Measurement Instruments, Heater Hook-up Wire, Heating Cable Systems, Immersion Heaters, Process Air and Duct, Heaters, Radiant Heaters, Strip Heaters, Tubular Heaters

• *click here to go to the omega.com home page* •