INSTRUCTION MANUAL (ATEX / IECEx)

BExS120D and BExS120D-R Flameproof Sounders

For use in Flammable Gas and Dust Atmospheres

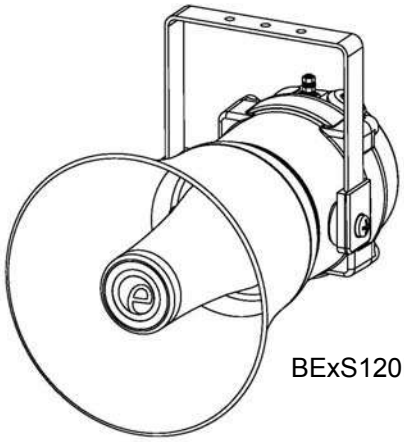

BExS120D

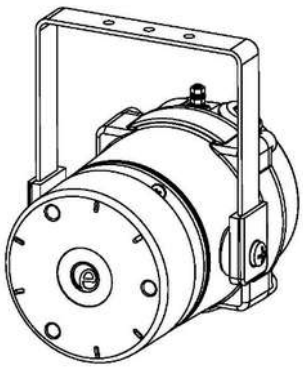

BExS120D-R

1) Warnings

- DO NOT OPEN WHEN AN EXPLOSIVE ATMOSPHERE IS PRESENT
- DO NOT OPEN WHEN ENERGIZED
- POTENTIAL ELECTROSTATIC CHARGING HAZARD
- COVER BOLTS CLASS A4-80
- USE HEAT RESISTING CABLES AND CABLE GLANDS (RATED 110°C) AT AMB. TEMPERATURES OVER 40°C

2) Rating & Marking Information

All units have a rating label, which carries the following important information: -

Model No.: BExS120D or BExS120D-R

Input Voltage: DC Units 12V or 24V or 48V
AC Units 115V or 230V

BExS120D or BExS120D-R Codes:
Ex d IIC T4 Gb Ta. -50°C to +55°C
Ex d IIB T4 Gb Ta. -50°C to +70°C
Ex tb IIIC T100°C Db Ta. -50°C to +55°C
Ex tb IIIC T115°C Db Ta. -50°C to +70°C

Certificate No. KEMA 99ATEX6312X
IECEx KEM 10.0003X

Epsilon x Equipment Group and Category: **II 2G**
II 2D

CE Marking Notified Body No. **0518**

The units can be installed in locations with the following conditions:

Area Classification Gas:

Zone 1	Explosive gas air mixture likely to occur in normal operation.
Zone 2	Explosive gas atmosphere not likely to occur in normal operation but may be present for short periods.

Gas Groupings:

Group IIA	Propane
Group IIB	Ethylene
Group IIC	Hydrogen and Acetylene (up to 55°C ambient)

Temperature Classification:

T1	450ºC
T2	300ºC
T3	200ºC
T4	135ºC

Area Classification Dust:

Zone 21	Explosive dust air mixture likely to occur in normal operation.
Zone 22	Explosive dust air mixture not likely to occur in normal operation, and if it does, it will only exist for a short time.

Dust Groupings:

Group IIIA	Combustible Dusts
Group IIIB	Non-Conductive Dust
Group IIIC	Conductive Dust

Maximum Surface Temperature for Dust Applications:
100ºC at +55 ºC ambient
115 ºC at +70 ºC ambient

IP Rating: IP66/67 to EN/IEC60529 and IP6X to EN/IEC60079-0, EN/IEC60079-31

Equipment Category: 2G / 2D

Equipment Protection Level: Gb / Db

Ambient Temperature Range:
-50°C to +55°C Gas Groups IIA, IIB and IIC
-50°C to +70°C Gas Groups IIA and IIB
-50°C to +70°C Dust Groups IIIA, IIIB and IIIC

3) Type Approval Standards

The sounder carries an EC Type Examination Certificate and IECEx Certificate of Conformity, and have been certified to comply with the following standards:

EN60079-0:2012+A11:2013 / IEC60079-0:2011 (Ed 6): Explosive Atmospheres - Equipment. General requirements

EN60079-1:2007 / IEC60079-1:2007 (Ed 6): Explosive Atmospheres - Equipment protection by flameproof enclosures "d"

EN 60079-31:2014 / IEC60079-31:2013 (Ed 2): Explosive Atmospheres - Equipment dust ignition protection by enclosure "t"

4) Installation Requirements

The sounder must only be installed by suitably qualified personnel in accordance with the latest issues of the relevant standards:

EN60079-14 / IEC60079-14: Explosive atmospheres - Electrical installations design, selection and erection

EN60079-10-1 / IEC60079-10-1: Explosive atmospheres - Classification of areas. Explosive gas atmospheres

EN60079-10-2 / IEC60079-10-2: Explosive atmospheres – Classification of areas. Explosive dust atmospheres

The installation of the sounder must also be in accordance with any local codes that may apply and should only be carried out by a competent electrical engineer who has the necessary training.

5) Special Conditions of Use

Repair of the flamepath / flameproof joints is not permitted.

The enclosure is non-conducting and may generate an ignition-capable level of electrostatic charges under certain extreme conditions (such as high-pressure steam). The user should ensure that the equipment is not installed in a location where it may be subjected to external conditions that might cause a build-up of electrostatic charges on non-conducting surfaces.

Additionally, cleaning of the equipment should be done only with a damp cloth.

6) Location and Mounting

The location of the sounder should be made with due regard to the area over which the warning signal must be visible. They should only be fixed to services that can carry the weight of the unit.

The BEx sounder should be secured to any flat surface using the three 7mm fixing holes on the stainless steel U shaped mounting bracket. See Figure 1. The required angle can be achieved by loosening the two large bracket screws in the side of the unit, which allow adjustment of the sounder in steps of 18°. On completion of the installation then two large bracket adjustment screws on the side of the unit must be fully tightened to ensure that the unit cannot move in service.

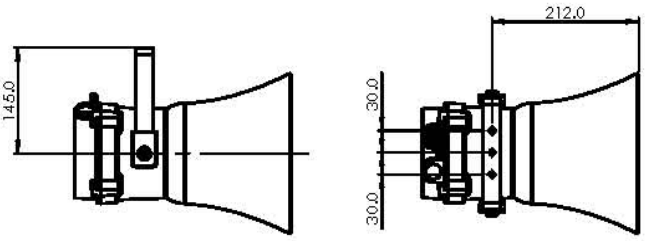

Fig. 1 Fixing Location for Sounder Flare

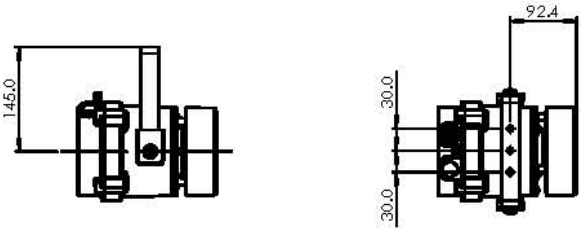

Fig. 1 Fixing Location for Sounder Radial

7) Access to the Flameproof Enclosure



Warning – High voltage may be present, risk of electric shock. DO NOT open when energised, disconnect power before opening.



Warning – Hot surfaces. External surfaces and internal components may be hot after operation, take care when handling the equipment.

To access the Ex d chamber, remove the four M6 hexagon socket head screws and withdraw the flameproof cover taking extreme care not to damage the flameproof joints in the process. M6 cover screws are Class A4-80 stainless steel and only screws of this category can be used for the enclosure.

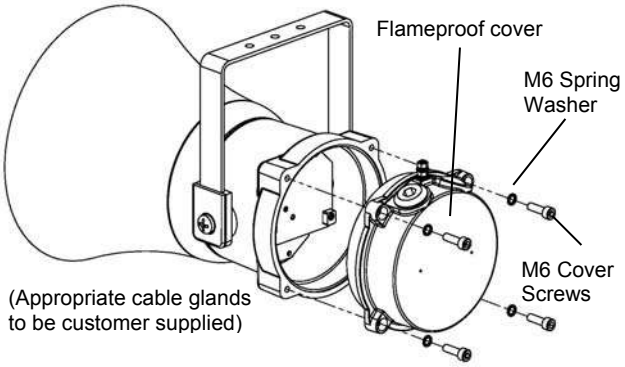

Fig. 2 Accessing the Explosion proof Enclosure.

On completion of the installation, the flameproof joints should be inspected to ensure that they are clean and that they have not been damaged during installation.

Check that the earth bonding wire between the two castings is secure and the 'O' ring seal is in place. When replacing the flameproof cover, casting ensure that it is square with the flameproof chamber casting before inserting. Carefully push the cover in place allowing time for the air to be expelled. Only after the cover is fully in place should the four M6 Stainless Steel A4-80 cover bolts and their spring washer be inserted and tightened down. If the cover jams while it is being inserted, carefully remove it and try again. Never use the cover bolts to force the cover into position.

8) Power Supply Selection

It is important that a suitable power supply is used to run the equipment. The power supply selected must have the necessary capacity to provide the input current to all of the units.

The following table shows the input current taken by the various sounders and shows the maximum voltage at which the sounders can be operated:

Model No.	Nominal I/P Voltage	Input Current	Max. I/P Volts
BExS120DDC012	12Vdc	850mA	15V
BExS120DDC024	24Vdc	800mA	30V
BExS120DDC048	48Vdc	420mA	58V
BExS120DAC115	115Vac	180mA	126V
BExS120DAC230	230Vac	90mA	253V

The input current will vary according to the voltage input level and the frequency of the tone selected. The current levels shown above are for the 440Hz Continuous tone @ nominal input voltage.

9) Selection of Cable. Cable Glands, Blanking Elements & Adapters

When selecting the cable size, consideration must be given to the input current that each unit draws (see table above), the number of sounders on the line and the length of the cable runs. The cable size selected must have the necessary capacity to provide the input current to all of the sounders connected to the line.

For ambient temperatures over +40ºC the cable entry temperature may exceed +70ºC and therefore suitable heat resisting cables and cable glands must be used, with a rated service temperature of at least 110ºC

The dual cable gland entries have an M20 x 1.5 entry thread. To maintain the ingress protection rating and mode of protection, the cable entries must be fitted with suitably rated ATEX / IECEx certified cable glands and/or suitably rated ATEX / IECEx certified blanking devices during installation according to EN / IEC60079-14.

If a high IP (Ingress Protection) rating is required then a suitable sealing washer must be fitted under the cable glands or blanking plugs.

For use in explosive dust atmospheres, a minimum ingress protection rating of IP6X must be maintained.

The BEx sounder range can be supplied with the following types of adapters:

M20 to ½" NPT
M20 to ¾" NPT
M20 to M25

It is important to note that stopping plugs cannot be fitted onto adapters, only directly onto the M20 entries.
Any other adapters used must be suitably rated and ATEX / IECEx certified adapters.

10) Earthing

Both AC and DC sounder units must be connected to an earth. The units are provided with internal and external earth terminals which are both located on the terminal chamber section of the unit.

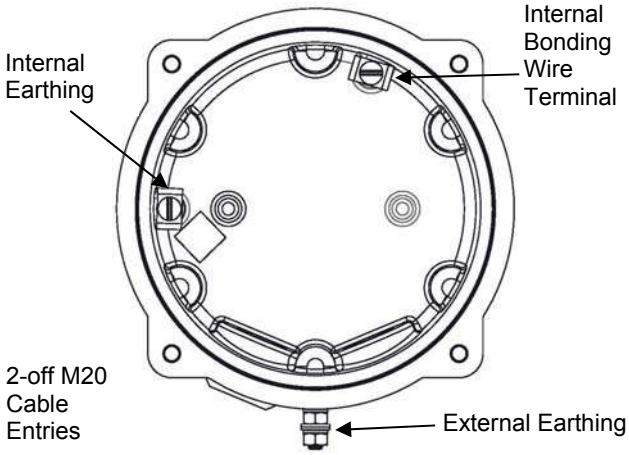

Fig. 3 Internal View of Cover

When using the internal earth terminal ensure that the stainless steel M4 flat washer is between the incoming earth wire and the enclosure.

Internal earthing connections should be made to the Internal Earth terminal in the base of the housing using a ring crimp terminal to secure the earth conductor under the earth clamp. The earth conductor should be at least equal in size and rating to the incoming power conductors.

External earthing connections should be made to the M5 earth stud, using a ring crimp terminal to secure the earth conductor to the earth stud. The external earth conductor should be at least 4mm² in size.

11) Cable Connections

Electrical connections are to be made into the terminal blocks on the PCBA located in the flameproof enclosure. See section 7 of this manual for access to the flameproof enclosure.

Wires having a cross sectional area between 0.5 mm² to 2.5mm² can be connected to each terminal way. If an input and output wire is required the 2-off Live/Neutral or +/- terminals can be used. If fitting 2-off wires to one terminal way the sum of the 2-off wires must be a maximum cross sectional area of 2.5mm². Strip wires to 8mm. Wires may also be fitted using ferrules. Terminal screws need to be tightened down with a tightening torque of 0.45 Nm / 5 Lb-in. When connecting wires to the terminals great care should be taken to dress the wires so that when the cover is inserted into the chamber the wires do not exert excess pressure on the terminal blocks. This is particularly important when using cables with large cross sectional areas such as 2.5mm².

12) AC Wiring

A 2-way terminal block is provided on the AC Sounder for power. There are 1-off Live and 1-off Neutral terminals in total. A 3-way terminal is provided for stage switching. There are 1-off stage 2, 1-off stage 3 and 1-off common terminals in total.

12.1 Wiring Diagrams

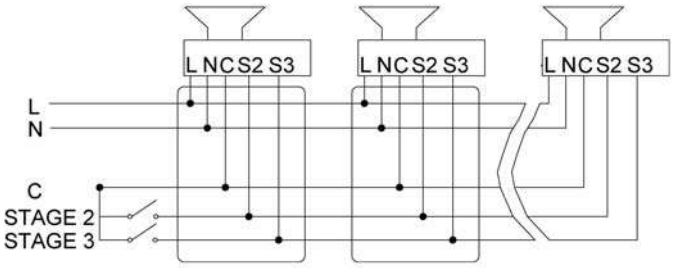

Fig 3. BExS120 AC Simplified Block Diagram

12.2 Stage Switching

12.2.1 Units First Stage Tones

Stage one (S1) Operation	
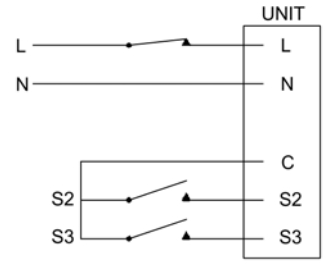	Simply connect the supply voltage to the L and N supply terminals, (see fig. 4).

12.2.2 AC Units Second & Third Stage Tone Selection

To select the second, third and fourth stage tones on the BExS110 AC sounder.

Stage two (S2) Operation	
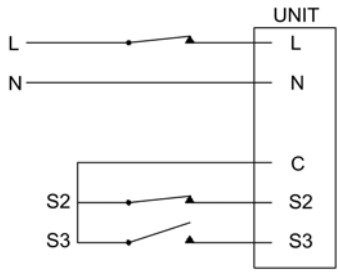	Power L and N, link the Common-C and S2 terminal. Dip switch alters stage 2 tone.
Stage three (S3) Operation	
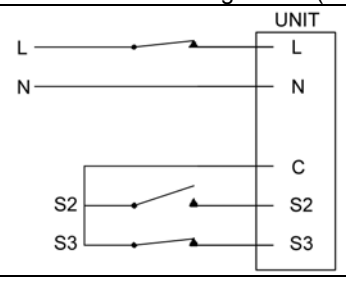	Power L and N, link the Common-C and S3 terminals. Dip switch alters stage 3 tone.

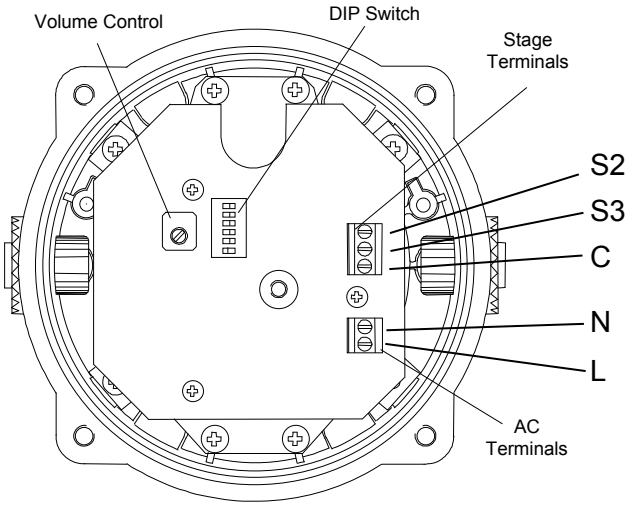

Fig. 4 AC Terminals

13) DC Wiring

A 4-way terminal block is provided on the DC Sounder. There are 1-off +ve, 1-off -ve, 1-off stage 2 and 1-off stage 3 terminals in total.

13.1 Wiring Diagrams

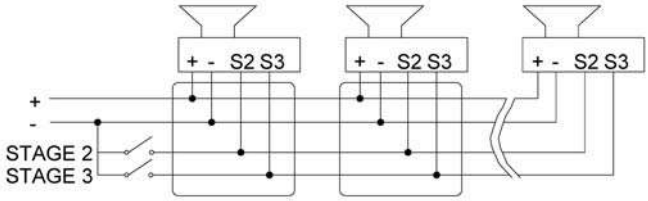

Fig. 5a DC Simplified Block Diagram (negative switching)

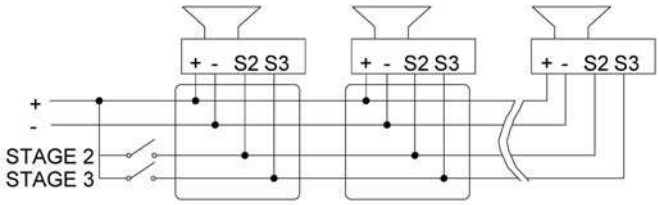

Fig. 5b DC Simplified Block Diagram (positive switching)

13.2 Stage Switching

13.2.1 Units First Stage Tones

Stage one (S1) Operation	
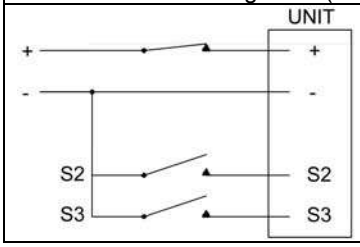	Simply connect the supply voltage to the + and - supply terminals, (see fig. 6).

13.2.2 DC Units Second & Third Stage Tone Selection

For units set up for –ve switching (default setting):

Stage two (S2) Operation	
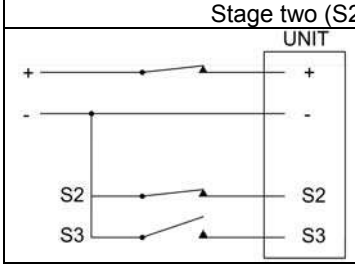	Power +ve and –ve, link a -ve supply line to the S2 terminal. Dip switch alters stage 2 tone.

Stage three (S3) Operation	
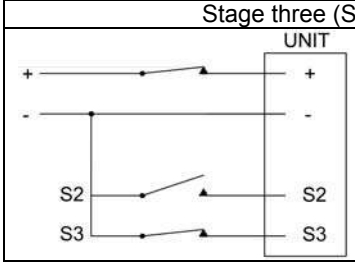	Power +ve and –ve, link a -ve supply line to the S3 terminal. Dip switch alters stage 3 tone.

For units set up for +ve switching (refer to 13.3):

Stage two (S2) Operation	
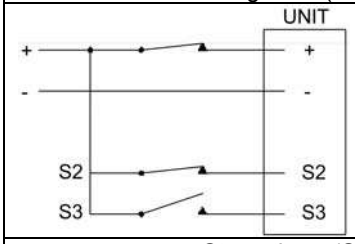	Power +ve and –ve, link a +ve supply line to the S2 terminal. Dip switch alters stage 2 tone.
Stage three (S3) Operation	
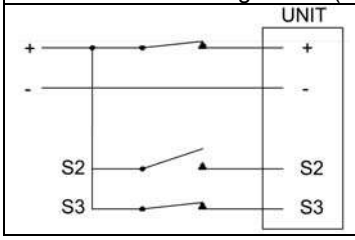	Power +ve and –ve, link a +ve supply line to the S3 terminal. Dip switch alters stage 3 tone.

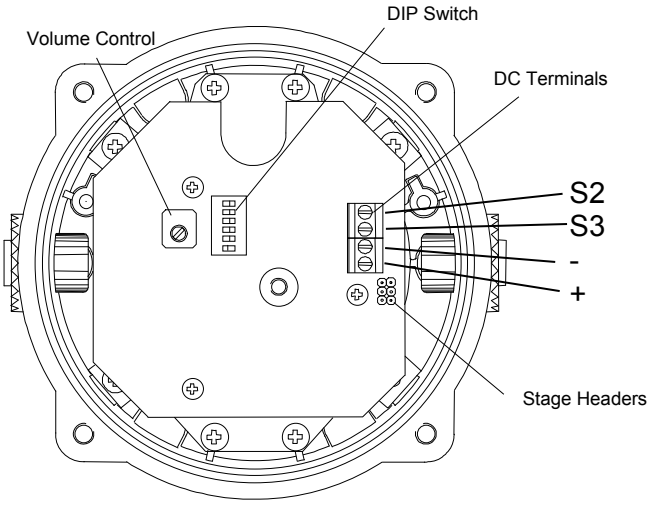

Fig. 6 DC Terminals

13.3 Stage Switching Polarity (DC Units Only)

The BExS120D DC sounders have the facility to use either +ve or –ve switching to change the tone to the second and third stages. Negative switching is the default setting. For –ve switching connect the two headers on the pcb to the right-hand (marked –ve) and centre pins. For +ve switching connect the headers to the left hand (marked +ve) and the centre pins. (Refer to Fig. 7)

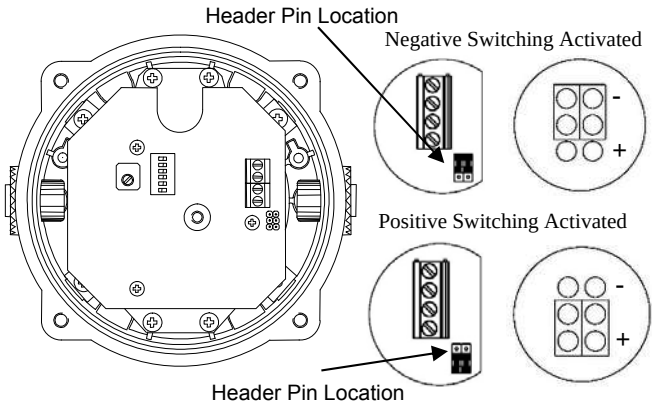

Fig. 7 Stage Switching Polarity

13.4 Line Monitoring

On BExS120D DC units, dc reverse line monitoring can be used if required. All DC sounders have a blocking diode fitted in their supply input lines. An end of line monitoring diode or an end of line monitoring resistor can be connected across the +ve and –ve terminals. If an end of line resistor is used it must have a minimum resistance value of 3k3Ω and a minimum power rating of 0.5 watts or a minimum resistance value of 500Ω and a minimum power rating of 2 watts.

The resistor must be connected directly across the +ve and -ve terminals as shown in the following drawing. The resistor leads should be kept as short as possible.

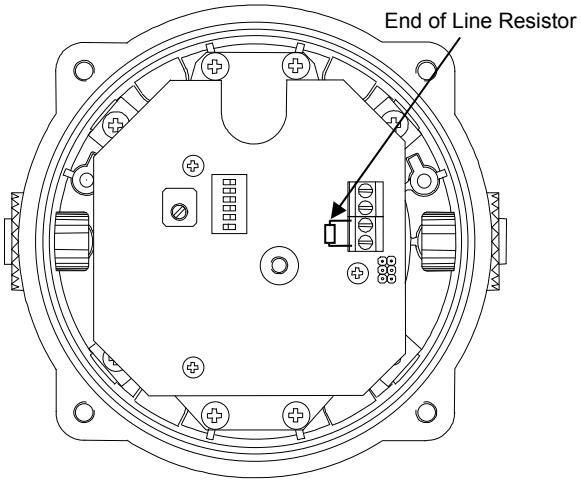

Fig. 7 End of Line Resistor Placement

14) Settings

14.1 Tone Selection

The sounders have 32 different tones that can be selected for the first stage alarm. The sounders can then be switched to sound second and third stage alarm tones. The tones are selected by operation of a DIP switch on the pcb for both DC and AC units. The tone table on page seven shows the switch positions for the 32 tones and which tones are available for the second and third stages. To operate the sounder on stage one simply connect the supply voltage to the normal supply terminals (+ve and –ve for DC units, L and N for AC units).

14.2 Volume Control



Warning - High noise levels above 85dB(A) during operation. High levels of noise may cause hearing loss, wear suitable ear protection when equipment is in operation.

The output level of the BEx sounder can be set by adjusting the volume control potentiometer (see Fig 9). For maximum output, set the potentiometer fully clockwise.

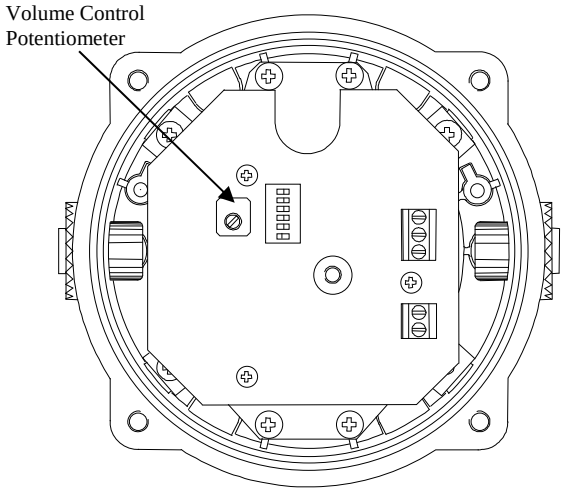

BExS120D AC

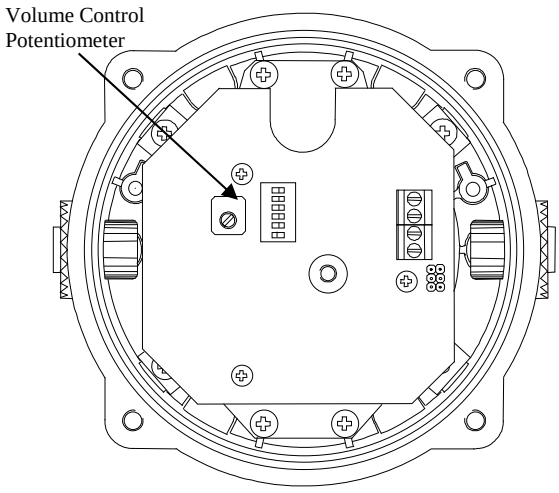

BExS120D DC

Fig. 9 Location of Volume Control Potentiometer

15) Maintenance, Overhaul & Repair

Maintenance, repair and overhaul of the equipment should only be carried out by suitably qualified personnel in accordance with the current relevant standards:

EN60079-19 IEC60079-19	Explosive atmospheres - Equipment repair, overhaul and reclamation
EN 60079-17 IEC60079-17	Explosive atmospheres - Electrical installations inspection and maintenance

To avoid a possible ELECTROSTACTIC CHARGE the unit must only be cleaned with a damp cloth.

Units must not be opened while an explosive atmosphere is present.

If opening the unit during maintenance operations a clean environment must be maintained and any dust layer removed prior to opening the unit.

Flameproof threaded joints and cemented joints are not intended to be repaired.

Tone Selection		DIP Switch Settings					Stage Selection	
Stage 1	**Frequency Description**	**1**	**2**	**3**	**4**	**5**	**Stage 2**	**Stage 3**
1	Continuous 1000Hz ***Toxic Gas Alarm***	0	0	0	0	0	Tone 31	Tone 11
2	Alternating 800/1000Hz at 0.25s intervals	1	0	0	0	0	Tone 17	Tone 5
3	Slow Whoop 500/1200Hz at 0.3Hz with 0.5s gap repeated	0	1	0	0	0	Tone 2	Tone 5
4	Sweeping 800/1000 at 1Hz	1	1	0	0	0	Tone 6	Tone 5
5	Continuous at 2400Hz	0	0	1	0	0	Tone 3	Tone 27
6	Sweeping 2400/2900Hz at 7Hz	1	0	1	0	0	Tone 7	Tone 5
7	Sweeping 2400/2900Hz at 1Hz	0	1	1	0	0	Tone 10	Tone 5
8	Siren 500/1200/500Hz at 0.3Hz	1	1	1	0	0	Tone 2	Tone 5
9	Sawtooth 1200/500Hz at 1Hz	0	0	0	1	0	Tone 15	Tone 2
10	Alternating 2400/2900Hz at 2Hz	1	0	0	1	0	Tone 7	Tone 5
11	Intermittent 1000Hz at 0.5Hz ***General alarm***	0	1	0	1	0	Tone 31	Tone 1
12	Alternating 800/1000Hz at 0.875Hz	1	1	0	1	0	Tone 4	Tone 5
13	Intermittent 2400Hz at 1Hz	0	0	1	1	0	Tone 15	Tone 5
14	Intermittent 800Hz 0.25s on 1s off	1	0	1	1	0	Tone 4	Tone 5
15	Continuous at 800Hz	0	1	1	1	0	Tone 2	Tone 5
16	Intermittent 660Hz 150mS on, 150mS off	1	1	1	1	0	Tone 18	Tone 5
17	Alternating 544Hz (100mS)/440Hz(400mS)	0	0	0	0	1	Tone 2	Tone 27
18	Intermittent 660Hz 1.8s on, 1.8s off	1	0	0	0	1	Tone 2	Tone 5
19	1400Hz to 1600Hz sweep up over 1s - 1600Hz to 1400Hz sweep down over 0.5s	0	1	0	0	1	Tone 2	Tone 5
20	Continuous 660Hz	1	1	0	0	1	Tone 2	Tone 5
21	Alternating 554/440Hz at 1Hz	0	0	1	0	1	Tone 2	Tone 5
22	Intermittent 554Hz at 0.875Hz	1	0	1	0	1	Tone 2	Tone 5
23	800Hz pulsing at 2Hz	0	1	1	0	1	Tone 6	Tone 5
24	Sweeping 800/1000Hz at 50Hz	1	1	1	0	1	Tone 29	Tone 5
25	Sweeping 2400/2900Hz at 50Hz	0	0	0	1	1	Tone 29	Tone 5
26	Simulated bell sound	1	0	0	1	1	Tone 2	Tone 1
27	Continuous 554Hz	0	1	0	1	1	Tone 26	Tone 5
28	Continuous 440Hz	1	1	0	1	1	Tone 2	Tone 5
29	Sweeping 800/1000Hz at 7Hz	0	0	1	1	1	Tone 7	Tone 5
30	420Hz repeating 0.625s on, 0.625s off ***Australian alert signal***	1	0	1	1	1	Tone 32	Tone 5
31	1200/500Hz at 1 Hz ***Prepare to Abandon Platform***	0	1	1	1	1	Tone 11	Tone 1
32	Sweeping 500/1200Hz 3.75s on, 0.25s off 15Hz	1	1	1	1	1	Tone 26	Tone 1

16) Fire Alarm Certification to EN54-3

The BExS120D, 24Vdc variant, with flare style horn, is certified for use as a Sounder in Fire Alarm Systems according to Regulation EU No. 305/2011: Construction Products Regulation (CPR), and also holds VdS Approval for Components and Systems for use in Fire Alarm Systems.

EC Type Examination Certificate: 0708-CPD-20225
VdS Approval No.: G 206011
Notified Body: VdS Schadenverhütung GmbH
Notified Body No.: 0786
Standards applied: EN 54-3:2001 + A1:2002
Supply voltage: 18-30Vdc

The Sounders are certified for tones 2, 3, 9, 15, 16 and 17. For SPL levels at min. and max. supply voltage see tables below.

BExS120D (Input Voltage 18V)

Tone No. and Frequency Description	Horizontal Plane (0°)						Vertical Plane (90°)					
	15°	45°	75°	105°	135°	165°	15°	45°	75°	105°	135°	165°
2 - 800/1000Hz @ 0.25 Sec Alternating	113.6	116.0	119.6	119.6	113.7	112.8	113.1	116.7	119.2	119.8	112.9	112.3
3 - 500/1200Hz @ 0.3Hz 0.5 Sec Slow Whoop	114.5	115.9	119.8	119.9	114.8	113.5	113.9	115.7	119.5	119.7	114.7	113.1
9 - 1200/500Hz @ 1Hz - DIN / PFEER P.T.A.P.	114.5	115.1	119.3	119.1	114.0	112.7	114.2	114.8	118.8	119.6	113.6	112.8
15 - 800Hz Continuous	113.4	116.7	119.5	119.9	117.3	113.3	112.5	117.0	119.2	119.8	117.6	112.8
16 - 660Hz 150mS ON 150mS OFF Intermittent	103.0	103.7	107.6	107.4	103.8	102.0	102.0	104.1	108.4	107.9	103.3	102.8
17 - 544Hz (100mS)/440Hz (400mS) - NF S 32-001	110.4	113.2	116.4	117.1	112.9	109.7	110.8	112.9	116.7	117.8	113.6	109.4

BExS120D (Input Voltage 30V)

Tone No. and Frequency Description	Horizontal Plane (0°)						Vertical Plane (90°)					
	15°	45°	75°	105°	135°	165°	15°	45°	75°	105°	135°	165°
2 - 800/1000Hz @ 0.25 Sec Alternating	112.9	115.6	119.5	119.6	113.8	112.3	113.1	116.3	119.1	119.3	114.3	111.7
3 - 500/1200Hz @ 0.3Hz 0.5 Sec Slow Whoop	114.4	116.7	119.5	119.5	114.9	113.6	113.5	116.0	118.8	119.7	114.2	113.8
9 - 1200/500Hz @ 1Hz - DIN / PFEER P.T.A.P.	113.6	115.1	119.3	119.3	114.1	112.6	113.6	115.4	119.9	118.6	114.3	111.8
15 - 800Hz Continuous	111.0	115.8	118.3	118.9	117.0	112.1	110.8	116.5	117.9	118.7	116.8	112.9
16 - 660Hz 150mS ON 150mS OFF Intermittent	103.8	105.9	107.6	108.1	105.4	103.5	104.6	105.4	107.4	107.9	105.9	102.9
17 - 544Hz (100mS)/440Hz (400mS) - NF S 32-001	112.5	114.9	118.1	118.5	115.4	112.2	111.6	115.5	117.8	119.1	115.9	111.6