Liquid level monitors and controls

Content

Ordering details
- CM-ENE MIN, CM-ENE MAX **2**/ 82
- CM-ENS **2**/ 83
- CM-ENS UP/DOWN **2**/ 84
- CM-ENN **2**/ 85
- CM-ENN UP/DOWN **2**/ 86
- Accessories for liquid level relays **2**/ 87

Technical data
- CM-ENE MIN, CM-ENE MAX **2**/ 88
- CM-ENS, CM-ENS UP/DOWN **2**/ 89
- CM-ENN, CM-ENN UP/DOWN **2**/ 90

Approvals and marks **2**/ 6
Technical diagrams **2**/102
Dimensional drawings **2**/103
Accessories **2**/104

Liquid level relays
CM-ENE MIN, CM-ENE MAX
Ordering details



CM-ENE MIN



CM-ENE MAX

① R: yellow LED - relay status

- Monitoring of pump systems for dry running (ENE MIN) and overflow (ENE MAX)
- Connection of 2 electrodes possible at C and MIN/MAX
- 3 supply voltage versions
- Optimal price/performance ratio
- 1 n/o contact: Open-circuit principle for CM-ENE MIN
- Closed-circuit principle for CM-ENE MAX
- LED for status indication

The liquid level relays CM-ENE MIN and CM-ENE MAX are used to monitor levels of conductive liquids, for example in pump control systems for dry-running or overflow monitoring.

The measuring principle is based on the occurring resistance change when moisting single-pole electrodes. The single-pole electrodes (see also section Accessories) are connected to the terminals C and MIN or MAX.

If the supply voltage is applied to A1-A2 and the electrodes are wet, the output relay of the CM-ENE MIN is energized and the output relay of the CM-ENE MAX is de-energized.

The output relay of the CM-ENE MIN de-energizes if the electrodes are no longer wet. The output relay of the CM-ENE MAX energizes if the electrodes are no longer wet.

Function diagram CM-ENE MIN

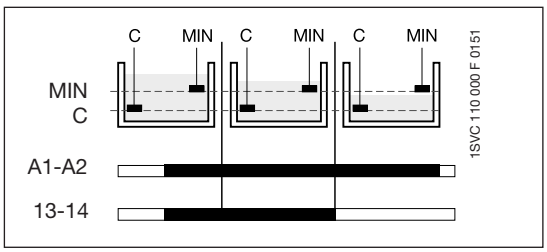

Connection diagram CM-ENE MIN

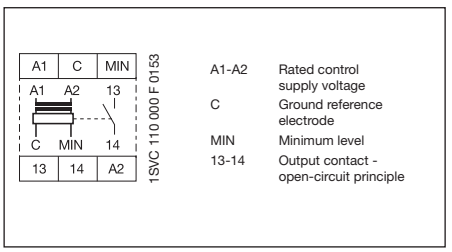

Function diagram CM-ENE MAX

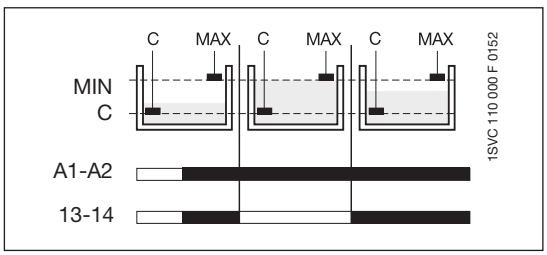

Connection diagram CM-ENE MAX

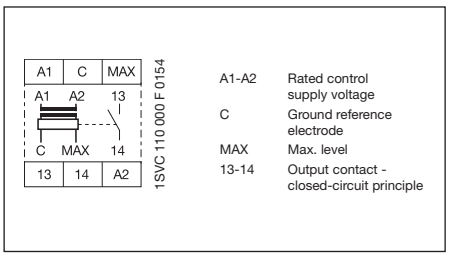

If a metal tank is used, the ground reference electrode C is not required. In this case the cable can be connected directly to the metal surface of the tank.

Application examples

CM-ENE MIN | CM-ENE MAX | CM-ENE MIN und CM-ENE MAX

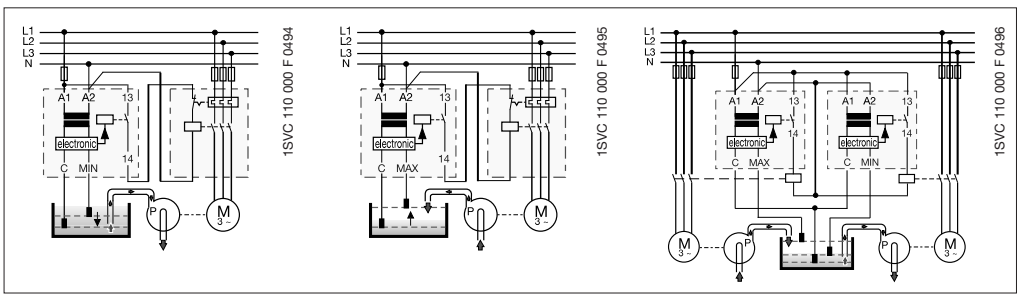

Suitable for		Not suitable for	
spring water	acids, bases	chemically pure water	ethylene glycol
drinking water	liquid fertilizers	fuel	concentrated alcohol
sea water	milk, beer, coffee	oils	paraffin
sewage	non-concentrated alcohol	explosive areas (liquid gas)	lacquers

Type	Rated control supply voltage	Order code	Pack. unit pieces	Price 1 piece	Weight 1 piece kg / lb
CM-ENE MIN	24 V AC	**1SVR 550 855 R9500**	1		0.15 / 0.33
	110-130 V AC	**1SVR 550 850 R9500**	1		0.15 / 0.33
	220-240 V AC	**1SVR 550 851 R9500**	1		0.15 / 0.33
CM-ENE MAX	24 V AC	**1SVR 550 855 R9400**	1		0.15 / 0.33
	110-130 V AC	**1SVR 550 850 R9400**	1		0.15 / 0.33
	220-240 V AC	**1SVR 550 851 R9400**	1		0.15 / 0.33

• **Accessories**..... 2/87 and 2/104 • **Technical data**.....2/88 • **Dimensional drawings** 2/103

2CDC110004C0207

Liquid level relays
CM-ENS
Ordering details



CM-ENS

① "Sens." - sensitivity potentiometer for adjusting the response sensitivity
② R: yellow LED - relay status
③ U: green LED - control supply voltage
④ Marker label

- Monitoring and control of liquid levels (when draining or filling liquids in tanks)
- Monitoring and control of mixture ratios (conductivity of liquids)
- Adjustable response sensitivity 5-100 kΩ
- 4 supply voltage versions 24 - 415 V AC
- Version with protective separation acc. to VDE 0160
- Cascadable
- 1 c/o contact or 1 n/o and 1 n/c contact
- 2 LEDs for status indication

The CM-ENS monitors levels of conductive liquids and is used for example for liquid level control in pump systems. It can be used for filling or draining tanks for example.

It is also suitable for monitoring the conductivity of liquids. The measuring principle is based on the resistance change sensed by single-pole electrodes. After the supply voltage is applied to the terminals A1 and A2, the output relay is de-energized. The probes must be connected to C, MAX, MIN.

The output relay energizes if the liquid exceeds the maximum level (C and MAX wet) and de-energizes if the liquid level is below the minimum level (MAX and MIN dry).

Based on the measuring circuit there will be a response delay of approx. 250 ms at maximum sensitivity. Different levels in one tank can be controlled by up to 5 CM-ENS without interfering with each other.

Function diagram CM-ENS

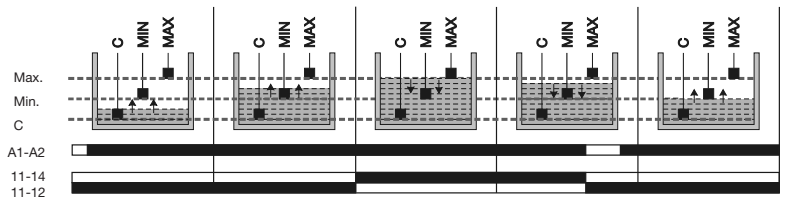

When using a metal tank the electrode C is not required. In this case the cable can be connected directly to the metal surface of the tank.

Application examples

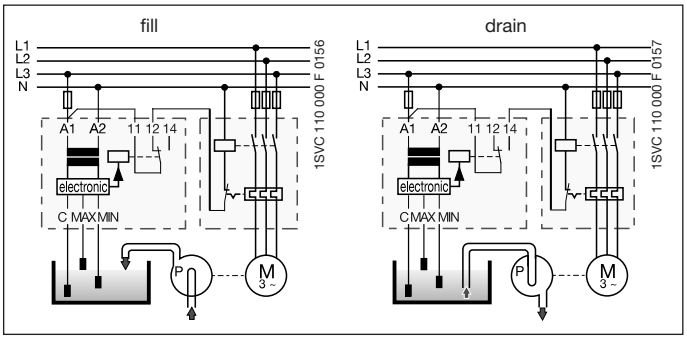

Connection diagram CM-ENS

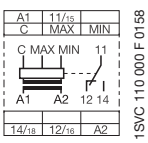

A1-A2	Rated control supply voltage
C	Ground reference electrode
MAX	Maximum level
MIN	Minimum level
11(15)-12(16)/14(18)	Output contacts - open-circuit principle

Cascading
The electrode inputs can be interconnected as required, which ensures simple monitoring of different liquid levels.

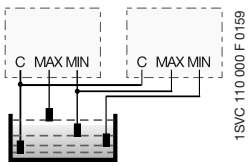

Redundancy
Redundant liquid level monitoring or control can be implemented by connecting the electrodes to two units.

This makes the application much safer.

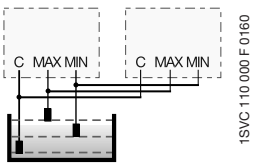

Suitable for		Not suitable for	
spring water	acids, bases	chemically pure water	ethylene glycol
drinking water	liquid fertilizers	fuel	concentrated alcohol
sea water	milk, beer, coffee	oils	paraffin
sewage	non-concentrated alcohol	explosive areas (liquid gas)	lacquers

Type	Rated control supply voltage	Order code	Pack. unit pieces	Price 1 piece	Weight 1 piece kg / lb
CM-ENS	24 V AC	**1SVR 430 851 R9100**	1		0.15 / 0.33
	110-130 V AC	**1SVR 430 851 R0100**	1		0.15 / 0.33
	220-240 V AC	**1SVR 430 851 R1100**	1		0.15 / 0.33
	380-415 V AC	**1SVR 430 851 R2100**	1		0.15 / 0.33

Version with protective separation acc. to VDE 0160, 1 n/o, 1 n/c

CM-ENS	220-240 V AC	**1SVR 430 851 R1300**	1		0.15 / 0.33

- **Accessories** ..... 2/87 and 2/104
- **Technical data** 2/89
- **Technical diagrams** 2/102
- **Dimensional drawings** 2/103

Liquid level relays
CM-ENS UP/DOWN
Ordering details

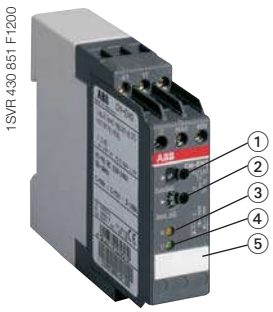

CM-ENS UP/DOWN

① "Func." - function selector switch:
"UP"- fill
"DOWN" - drain
② "Sens." - sensitivity potentiometer for adjusting the response sensitivity
③ R: yellow LED - relay status
④ U: green LED - control supply voltage
⑤ Marker label

- Monitoring and control of liquid levels
- Selectable function "fill" or "drain"
- Adjustable response sensitivity 5-100 kΩ
- Cascadable
- 1 c/o contact
- 2 LEDs for status indication

The CM-ENS UP/DOWN monitors levels of conductive liquids and other media, and is used e.g. for liquid level control in pump systems.
The measuring principle is based on the resistance change sensed by single-pole electrodes.
The output relay functions fill (UP) or drain (DOWN) can be selected on a front-face selector switch.
If the "UP" function is selected, the output relay is energized until the MAX electrode becomes wet. Then it is de-energized and not re-energized until the MIN electrode becomes dry.
If the "DOWN" function is selected, the output relay is energized as soon as the MAX electrode becomes wet. It remains energized until the liquid level has dropped below the MIN electrode.
The electrodes can be connected to more than one CM-ENS unit without interference.

Function diagram CM-ENS UP/DOWN

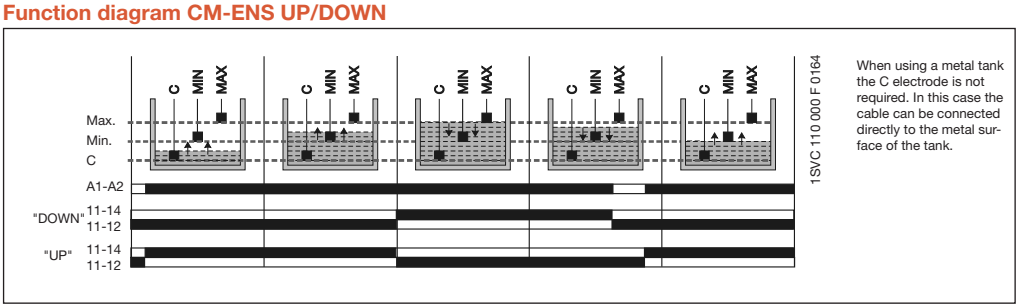

When using a metal tank the C electrode is not required. In this case the cable can be connected directly to the metal surface of the tank.

Application examples

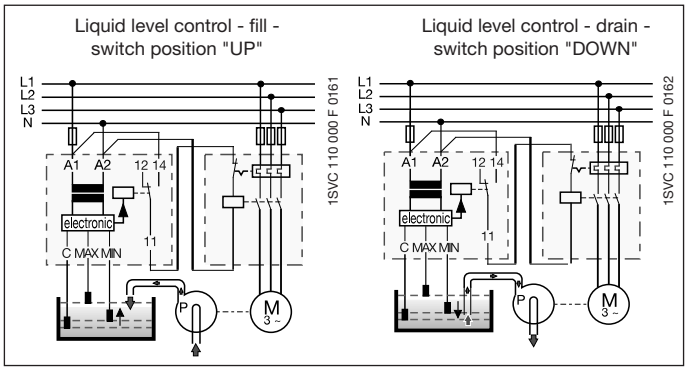

Connection diagram CM-ENS UP/DOWN

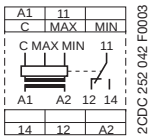

A1 - A2	Rated control supply voltage
C	Ground reference electrode
MAX	Maximum level
MIN	Minimum level
11-12/14	Output contacts - open-circuit or closed-circuit principle selectable

Cascading of electrodes
The electrode inputs can be interconnected as required, which ensures simple monitoring of different liquid levels.

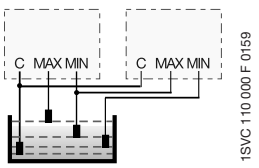

Redundancy
Redundant liquid level monitoring or control can be implemented by connecting the electrodes to two units.
This makes the application much safer.

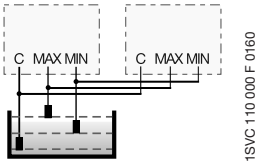

Suitable for		Not suitable for	
spring water	acids, bases	chemically pure water	ethylene glycol
drinking water	liquid fertilizers	fuel	concentrated alcohol
sea water	milk, beer, coffee	oils	paraffin
sewage	non-concentrated alcohol	explosive areas (liquid gas)	lacquers

Type	Rated control supply voltage	Order code	Pack. unit pieces	Price 1 piece	Weight 1 piece kg / lb
CM-ENS UP/DOWN	24 V AC	**1SVR 430 851 R9200**	1		0.15/0.33
	110-130 V AC	**1SVR 430 851 R0200**	1		0.15/0.33
	220-240 V AC	**1SVR 430 851 R1200**	1		0.15/0.33

• **Accessories** ..... 2/87 and 2/104
• **Technical diagrams** 2/102
• **Technical data** 2/89
• **Dimensional drawings** 2/103

Liquid level relays
CM-ENN
Ordering details

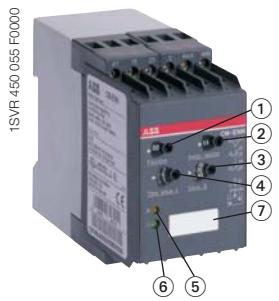

CM-ENN

① "Function" - time function selector switch:
- ⊠ ON-delay
- ■ OFF-delay

② "Sens.-sector" - measuring range selector switch

③ "Sens. " - sensitivity potentiometer for adjusting the response sensitivity

④ "Time value" - fine adjustment of time delay

⑤ R: yellow LED - relay status

⑥ U: green LED - control supply voltage

⑦ Marker label

- Monitoring and control of liquid levels (when emptying or filling liquids in tanks)
- Monitoring and control of mixture ratios (conductivity of liquids)
- 3 response sensitivities from 250 Ω - 500 kΩ in one unit
- 5 supply voltage versions 24 V AC/DC - 415 V AC
- Selectable ON- or OFF-delay 0.1-10 s
- 2 c/o contacts
- 2 LEDs for status indication

The CM-ENN monitors levels of conductive liquids and is used for example for liquid level monitoring in pump control systems, for dry-running protection of submersible pumps or overflow monitoring of tanks. It is also suitable for conductivity monitoring of liquids.
The measuring principle is based on the resistance change sensed by single-pole electrodes (wet or dry). Instead of electrodes, other sensors or transducers can also be used if their output quantities are different resistance values. The measuring, output and supply circuits are electrically isolated for potential separation and to prevent electrical interference.
Due to the integrated ON- or OFF-delay, it is possible to set up time-dependent liquid controls using only two electrodes (C, MAX). Different liquid levels in one tank can be controlled by up to 5 CM-ENN (AC version) without mutual interference.

Function diagrams CM-ENN

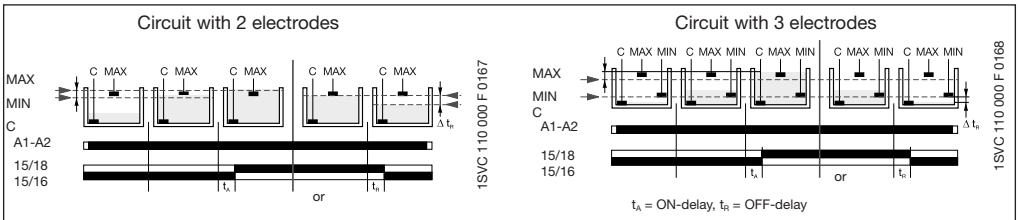

When using a metal tank the C electrode is not required. In this case the cable can be connected directly to the metal surface of the tank.

Application examples

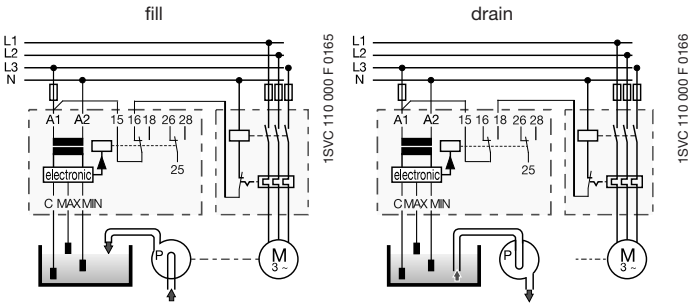

For commissioning, set both potentiometers (response sensitivity = R value and ON-delay = time value) to the minimum value (5) and select a suitable resistance range (sector).
After all electrodes have been wetted by the liquid being monitored, turn the sensitivity potentiometer towards maximum value (100) until the relay energizes. If the relay does not energize, select a higher Ω value (sector) on the device and proceed as before.
Then it has to be checked if the relay de-energizes properly as soon as the electrodes C and MIN are no longer wet. Liquid levels higher than the maximum level electrode can be obtained by setting an ON-delay (TA = 0.1...10 s).

Liquid levels lower than the minimum level electrode can be obtained by setting an OFF-delay time (TR = 0.1...10 s), e.g. for emptying tanks.

Connection diagram CM-ENN

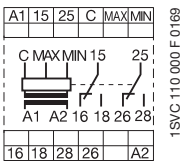

A1-A2	Rated control supply voltage
C	Ground reference electrode
MIN	Min. level electrode
MAX	Max. level electrode
15-16/18 25-26/28	Output contacts - open-circuit principle

Typ	Rated control supply voltage	Order code	Pack. unit pieces	Price 1 piece	Weight 1 piece kg / lb
CM-ENN	24-240 V AC/DC	**1SVR 450 055 R0000**	1		0.30 / 0.66
	24 V AC	**1SVR 450 059 R0000**	1		0.30 / 0.66
	110-130 V AC	**1SVR 450 050 R0000**	1		0.30 / 0.66
	220-240 V AC	**1SVR 450 051 R0000**	1		0.30 / 0.66
	380-415 V AC	**1SVR 450 052 R0000**	1		0.30 / 0.66

Response sensitivity	Max. electrode current	Max. cable capacity	Max. cable length	
250 Ω - 5 kΩ	8 mA	200 nF	1000 m	
2.5-50 kΩ	2 mA	20 nF	100 m	
25-500 kΩ	0.5 mA	4 nF	20 m	

- **Accessories** ..... 2/87 and 2/104
- **Technical diagrams** 2/102
- **Technical data** 2/90
- **Dimensional drawings** 2/103

Liquid level relays - Liquid level control with two alarm outputs - CM-ENN UP/DOWN
Ordering details

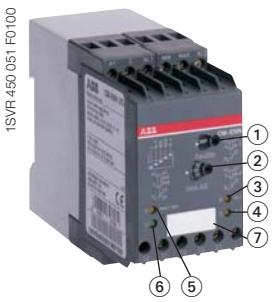

CM-ENN UP/DOWN

① "Func." - function selector switch:
"UP"- fill
"DOWN" - drain
② "Sens." - sensitivity potentiometer for adjusting the response sensitivity
③ R AL1: yellow LED - relay status AL1
④ R AL2: yellow LED - relay status AL2
⑤ R: MIN/MAX: yellow LED - relay status MIN/MAX
⑥ U: green LED - control supply voltage
⑦ Marker label

- Liquid level relay with 5 electrode inputs
- Level control with integrated overflow and dry-running protection
- Adjustable response sensitivity 5-100 kΩ
- Cascadable
- 1 c/o contact and 2 n/c contacts as alarm outputs
- 4 LEDs for status indication

The CM-ENN UP/DOWN monitors levels of conductive liquids and media and is used e.g. for liquid level control in pump systems. The measuring principle is based on the resistance change sensed by single-pole electrodes.

The function of the output relay 11-12/14 can be selected by a selector switch on the front of the unit to fill "UP" or drain "DOWN". If the "UP" function is selected, the output relay is energized until the MAX electrode becomes wet. Then it is de-energized and not re-energized until the MIN electrode becomes dry.

If the "DOWN" function is selected, the output relay is energized as soon as the MAX electrode becomes wet. It remains energized until the liquid level has dropped below the MIN electrode.

The electrode inputs AL1 and AL2 energize/de-energize the correspopnding output relays RAL1 (21-22) and RAL2 (31-32). AL1 opens if contact RAL1 (21-22) is wet. AL2 closes if contact RAL2 (31-32) is wet. This way, two additional alarm outputs for exceeding or dropping below the normal level can be implemented in addition to the filling levels MAX and MIN.

Function diagram CM-ENN UP/DOWN

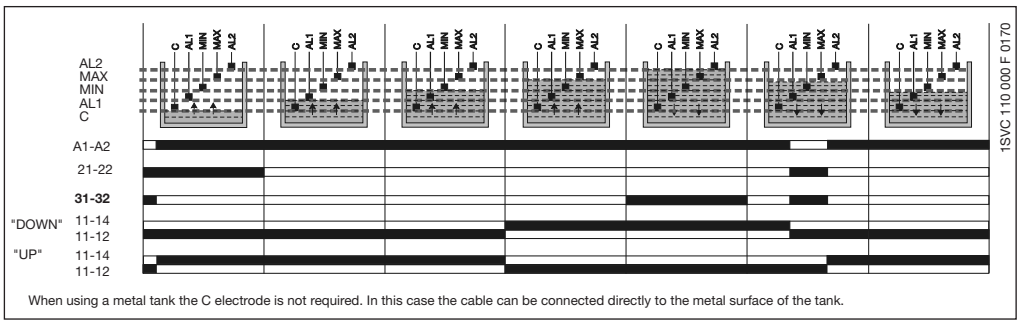

When using a metal tank the C electrode is not required. In this case the cable can be connected directly to the metal surface of the tank.

Application example

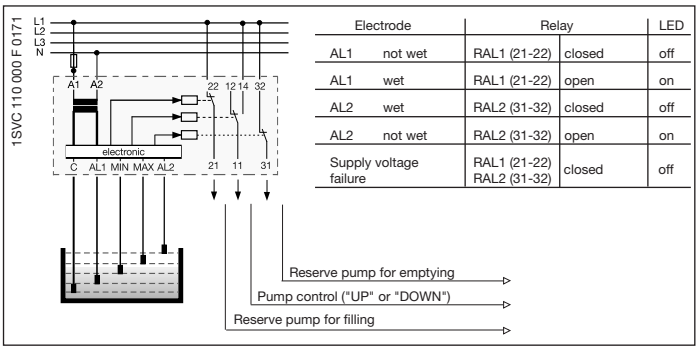

Electrode		Relay		LED
AL1	not wet	RAL1 (21-22)	closed	off
AL1	wet	RAL1 (21-22)	open	on
AL2	wet	RAL2 (31-32)	closed	off
AL2	not wet	RAL2 (31-32)	open	on
Supply voltage failure		RAL1 (21-22) RAL2 (31-32)	closed	off

Connection diagram CM-ENN UP/DOWN

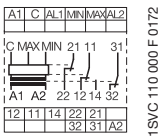

A1-A2	Rated control supply voltage
C	Ground reference electrode
MIN	Minimum level electrode
MAX	Maximum level electrode
AL1	Alarm electrode 1
AL2	Alarm electrode 2
11-12/14	Output contacts -
21-22	open-circuit or closed-circuit
31-32	principle selectable

Cascading of electrodes
The electrode inputs can be interconnected as required, which ensures simple monitoring of different liquid levels.

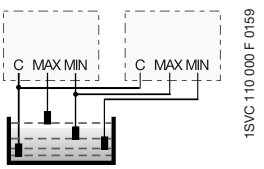

Redundancy
Redundant liquid level monitoring or control can be implemented by connecting the electrodes to two units.

This makes the application much safer.

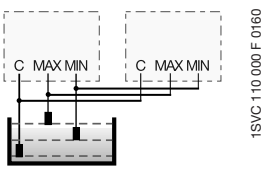

Suitable for		Not suitable for	
spring water	acids, bases	chemically pure water	ethylene glycol
drinking water	liquid fertilizers	fuel	concentrated alcohol
sea water	milk, beer, coffee	oils	paraffin
sewage	non-concentrated alcohol	explosive areas (liquid gas)	lacquers

Type	Rated control supply voltage	Order code	Pack. unit pieces	Price 1 piece	Weight 1 piece kg / lb
CM-ENN UP/DOWN	24 V AC	**1SVR 450 059 R0100**	1		0.15 / 0.33
	110-130 V AC	**1SVR 450 050 R0100**	1		0.15 / 0.33
	220-240 V AC	**1SVR 450 051 R0100**	1		0.15 / 0.33
	380-415 V AC	**1SVR 450 052 R0100**	1		0.15 / 0.33

• **Accessories** .....2/87 and 2/104
• **Technical diagrams** 2/102
• **Technical data** 2/89
• **Dimensional drawings** 2/103

Liquid level relays - Accessories
Electrodes
Ordering details, dimensional drawings

Compact support CM-KH-3 for 3 bar electrodes

Dimensions in mm

- Ideally suited for use with liquid level relays CM-ENS and CM-ENN
- Wire connection by screw terminals
- Pull relief by M16 screwed cable glands
- Temperature range up to 90 °C
- Food safe material (PPH)
- Screw-in electrodes (M4 thread)
- Distance plate (CM-AH-3) and locking nut (CM-GM-1) optionally available as an accessory

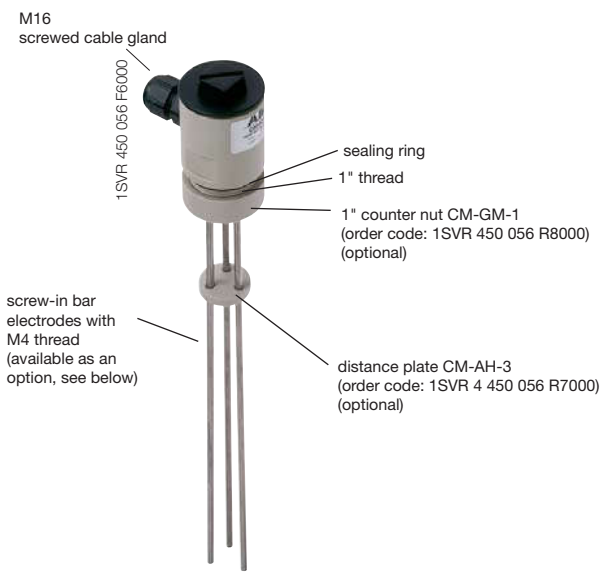

Compact support CM-KH-3

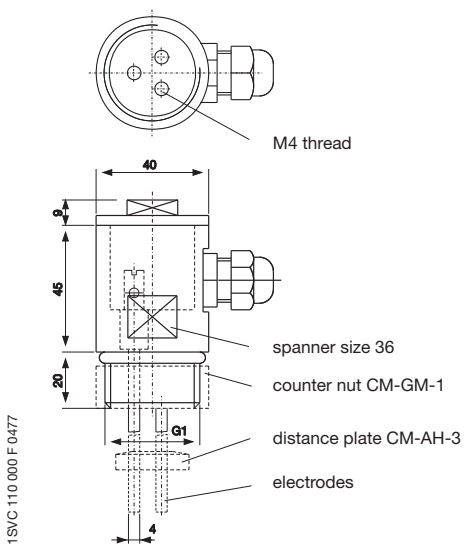

Distance plate CM-AH-3

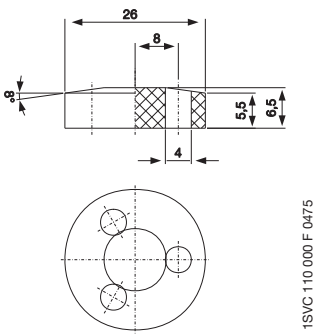

Counter nut CM-GM-1

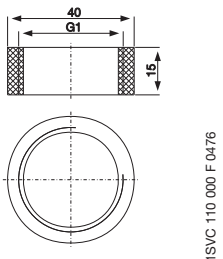

Technical data compact support

Type of mounting:	G 1" thread
Mounting position:	any
Enclosure material:	PPH
Sealing:	NBR 70
Temperature range:	90 °C max.
Pressure:	10 bar max. (60 °C)

Type	Description	Order code	Pack. unit 1 piece	Price 1 piece	Weight 1 piece kg / lb
CM-KH-3	Compact support for 3 bar electrodes	**1SVR 450 056 R6000**	1		0.06 / 0.132
CM-AH-3	Distance plate for 3 bar electrodes	**1SVR 450 056 R7000**	1		0.06 / 0.132
CM-GM-1	Counter nut for 1" thread	**1SVR 450 056 R8000**	1		0.06 / 0.132

Screw-in bar electrodes for compact support CM-KH-3

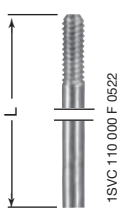

Thread M4

Material: stainless steel 304, high-grade steel 14301

Suspension electrode CM-HE



Steel electrode
(X14CrMoS17) with sleeve
(Lupulen 6011 L)
suitable up to 60°C max.

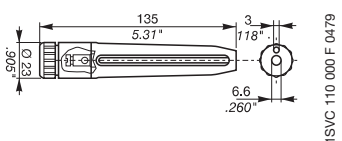

During project engineering the compatibility of the electrode material with the medium to be supervised is to be examined!

Type	Length	Order code	Pack. unit 1 piece	Price 1 piece	Weight 1 piece kg / lb
CM-SE-300	300 mm	**1SVR 450 056 R0000**	1		0.08 /0.176
CM-SE-600	600 mm	**1SVR 450 056 R0100**	1		0.08 /0.176
CM-SE-1000	1000 mm	**1SVR 450 056 R0200**	1		0.08 /0.176
CM-HE	-	**1SVR 402 902 R0000**	1		0.08 /0.176

Liquid level relays
CM-ENE MIN, CM-ENE MAX
Technical data

Type			CM-ENE MIN	CM-ENE MAX
Supply circuit				
Rated control supply voltage U_S - power consumption		**A1-A2**	24 V AC	approx. 1.5 VA
		A1-A2	110-130 V AC	approx. 1.2 VA
		A1-A2	220-240 V AC	approx. 1.4 VA
Rated control supply voltage U_S tolerance			-15...+15 %	
Rated frequency			50-60 Hz	
Duty time			100 %	
Measuring circuit			**MIN-C, MAX-C**	
Monitoring function			dry-running protection	overflow protection
Response sensitivity			0-100 kΩ, not adjustable	
Maximum electrode voltage			30 V AC	
Maximum electrode current			1.5 mA	
Electrode supply line		max. cable capacity	3 nF	
		max. cable length	30 m	
Timing circuit				
Time delay			-	
Tripping delay			fixed approx. 200 ms	
Indication of operational states				
Output relay energized			R: yellow LED	
Output circuits			**13-14**	
Kind of output			1 n/o contact	
Operational principle [1]			open-circuit principle	closed-circuit principle
Contact material			AgCdo	
Rated operational voltage U_e		(IEC/EN 60947-1)	250 V	
Mininimum switching voltage / minimum switching current			- / -	
Maximum switching voltage			250 V	
Rated operational current I_e (IEC/EN 60947-5-1)		AC12 (resistive) 230 V	4 A	
		AC15 (inductive) 230 V	3 A	
		DC12 (resistive) 24 V	4 A	
		DC13 (inductive) 24 V	2 A	
AC rating (UL 508)	Utilization category (Control Circuit Rating Code)		B 300	
	max. rated operational voltage		300 V AC	
	max. continuous thermal current at B 300		5 A	
	max. making/breaking apparent power at B 300		3600/360 VA	
Mechanical lifetime			30 x 10^6 switching cycles	
Electrical lifetime (AC12, 230 V, 4 A)			0.3 x 10^6 switching cycles	
Max. fuse rating to achieve short circuit protection		n/c contact	-	
		n/o contact	10 A fast-acting	
General data				
Dimensions (W x H x D)			22.5 x 78 x 78.5 mm (0.89 x 3.07 x 3.09 in)	
Mounting position			any	
Degree of protection		enclosure / terminals	IP50 / IP20	
Ambient temperature range		operation / storage	-20...+60 °C / -40...+85 °C	
Mounting			DIN rail (IEC/EN 60715)	
Electrical connection				
Wire size	fine-strand with wire-end ferrule		2 x 0.75-1.5 mm² (2 x 18-16 AWG)	
	fine-strand without wire-end ferrule		2 x 1-1.5 mm² (2 x 18-16 AWG)	
	rigid		2 x 0.75-1.5 mm² (2 x 18-16 AWG)	
Stripping length			10 mm (0.39 inch)	
Tightening torque			0.6-0.8 Nm	
Standards				
Product standard			IEC 255-6, EN 60255-6	
Low Voltage Directive			2006/95/EC	
EMC Directive			2004/108/EC	
Electromagnetic compatibility			EN 61000-6-2, EN 61000-6-4	
electrostatic discharge		IEC/EN 61000-4-2	Level 3 (6 kV / 8 kV)	
radiated, radio-frequency, electromagnetic field		IEC/EN 61000-4-3	Level 3 (10 V/m)	
electrical fast transient / burst		IEC/EN 61000-4-4	Level 3 (2 kV / 5 kHz)	
surge		IEC/EN 61000-4-5	Level 4 (2 kV L-L)	
conducted disturbances, induced by radio-frequency fields		IEC/EN 61000-4-6	Level 3 (10 V)	
Resistance to vibration (IEC 68-2-6)			6 g	
Mechanical resistance (IEC 68-2-6)			10 g	
Isolation data				
Rat. insulation volt. betw. supply, meas. & output circuit (VDE 0110, IEC 60947)			250 V	
Rated impulse withstand voltage between all isolated circuits (VDE0 110, IEC 664)			4 kV / 1.2-50 µs	
Test voltage between all isolated circuits			2.5 kV, 50 Hz, 1 min.	
Pollution category (VDE 0110, IEC 664, IEC 255-5)			3 / C	
Overvoltage category (VDE 0110, IEC 664, IEC 255-5)			III / C	
Environmental testing (IEC 68-2-30)			24 h cycle time, 55 °C, 93 % rel., 96 h	

[1] Open-circuit principle: Output relay energizes if the measured value exceeds/drops below the adjusted threshold.
Closed-circuit principle: Output relay de-energizes if the measured value exceeds/drops below the adjusted threshold.

• **Approvals** 2/6

2CDC110004C0207

Liquid level relays
CM-ENS, CM-ENS UP/DOWN
Technical data

Type			CM-ENS	CM ENS UP/DOWN
Supply circuit				
Rated control supply voltage U_S - power consumption		**A1-A2**	24 V AC	24 V AC
		A1-A2	110-130 V AC approx. 1.5 VA	110-130 V AC approx. 4 VA
		A1-A2	220-240 V AC approx. 1.5 VA	220-240 V AC approx. 4 VA
		A1-A2	380-415 V AC approx. 1.5 VA	
Rated control supply voltage U_S tolerance			-15...+10 %	
Rated frequency			50-60 Hz	
Duty time			100 %	
Measuring circuit			**MAX-MIN-C**	
Monitoring function			liquid level control	
Response sensitivity			5-100 kΩ, adjustable	
Maximum electrode voltage			30 V AC	
Maximum electrode current			1 mA	
Electrode supply line		max. cable capacity	10 nF	
		max. cable length	100 m	
Timing circuit				
Time delay			-	
Tripping delay			approx. 250 ms	
Indication of operational states				
Control supply voltage			U: green LED	
Output relay energized			R MAX/MIN: yellow LED	
Alarm relay AL1			-	R AL1: yellow LED
Alarm relay AL2			-	R AL2: yellow LED
Output circuits			**11-12/14, 21-22, 31-32**	
Kind of output			1 c/o contact, 1 n/o + 1 n/c contact [2]	
Operational principle [1]			open-circuit principle	open- and closed-circuit principle
Contact material			AgCdo	
Rated operational voltage U_e		(IEC/EN 60947-1)	250 V	
Minimum switching voltage / minimum switching current			- / -	
Maximum switching voltage			250 V	
Rated operational current I_e (IEC/EN 60947-5-1)	AC12 (resistive)	230 V	4 A	
	AC15 (inductive)	230 V	3 A	
	DC12 (resistive)	24 V	4 A	
	DC13 (inductive)	24 V	2 A	
AC rating (UL 508)	Utilization category (Control Circuit Rating Code)		B 300	
	max. rated operational voltage		300 V AC	
	max. continuous thermal current at B 300		5 A	
	max. making/breaking apparent power at B 300		3600/360 VA	
Mechanical lifetime			30 x 10^6 switching cycles	
Electrical lifetime (AC12, 230 V, 4 A)			0.3 x 10^6 switching cycles	
Max. fuse rating to achieve short circuit protection		n/c / n/o contact	10 A (4 A [2]) fast-act. / 10 A (6 A [2]) fast-act.	10 A fast-acting / 10 A fast-acting
General data				
Dimensions (W X H X D)			22.5 x 70 x 100 mm (0.89 x 3.07 x 3.94 in)	
Mounting position			any	
Degree of protection		enclosure / terminals	IP50 / IP20	
Ambient temperature range		operation / storage	-20...+60 °C / -40...+85 °C	
Mounting			DIN rail (IEC/EN 60715)	
Electrical connection				
Wire size		fine-strand with wire end ferrule	2 x 2.5 mm² (2 x 14 AWG)	
Standards				
Product standard			IEC 255-6, EN 60255-6	
Low Voltage Directive			2006/95/EG	
EMC Directive			2004/108/EG	
Electromagnetic compatibility			-	
electrostatic discharge		IEC/EN 61000-4-2	Level 3 (6 kV / 8kV)	
radiated, radio-frequency, electromagnetic field		IEC/EN 61000-4-3	Level 3 (10 V/m)	
electrical fast transient / burst		IEC/EN 61000-4-4	Level 3 (2 kV / 5 kHz)	
surge		IEC/EN 61000-4-5	Level 4 (2 kV L-L)	
conducted disturbances, induced by radio-frequency fields		IEC/EN 61000-4-6	Level 3 (10 V)	
Resistance to vibration (IEC 68-2-6)			4 g	
Mechanical resistance (IEC 68-2-6)			6 g	
Isolation data				
Rated insulation voltage between supply, measuring and output circuit (VDE 0110, IEC 60947)			250 V	
Rated impulse withstand voltage between all isolated circuits (VDE0 110, IEC 664)			4 kV / 1.2 - 50 µs	
Test voltage between all isolated circuits			2,5 kV, 50 Hz, 1 min.	
Pollution category (VDE 0110, IEC 664, IEC 255-5)			3 / C	
Overvoltage category (VDE 0110, IEC 664, IEC 255-5)			III / C	
Environmental testing (IEC 68-2-30)			24 h cycle time, 55 °C, 93 % rel., 96 h	

[1] Open-circuit principle: Output relay energizes if the measured value exceeds/drops below the adjusted threshold.
Closed-circuit principle: Output relay de-energizes if the measured value exceeds/drops below the adjusted threshold.

[2] 1SVR 430 851 R1300 (version with safe isolation)

• **Approvals** 2/6

Liquid level relays
CM-ENN UP/DOWN, CM-ENN
Technical data

Type			CM-ENN UP/DOWN	CM-ENN		
Supply circuit						
Rated control supply voltage U_S - power consumption	**A1-A2**		24 V AC	24 V AC		
	A1-A2		110-130 V AC approx. 1.5 VA	110-130 V AC approx. 2.5 VA		
	A1-A2		220-240 V AC approx. 1.5 VA	220-240 V AC approx. 3 VA		
	A1-A2		380-415 V AC approx. 1.5 VA	380-415 V ACapprox. 4 VA		
	A1-A2			24-240 V AC/DC approx. 2 VA/W		
Rated control supply voltage U_S tolerance			-15...+10 %			
Rated frequency			50-60 Hz	50-60 Hz oder DC		
Duty time			100 %			
Measuring circuit			**MAX-MIN-C**			
Monitoring function			liquid level control			
Response sensitivity			adjustable 5-100 kΩ	adjustable		
				250 Ω - 5 kΩ	2.5-50 kΩ	25-500 kΩ
Maximum electrode voltage			30 V AC	20 V AC		
Maximum electrode current			1 mA	8 mA	2 mA	0.5 mA
Electrode supply line		max. cable capacity	10 nF	200 nF	20 nF	4 nF
		max. cable length	100 m	1000 m	100 m	20 m
Timing circuit						
Time delay			-	0.1-10 s, adjustable, ON- or OFF-delay		
Tripping delay			approx. 250 ms	-		
Indication of operational states						
Control supply voltage			U: green LED			
Output relay energized			R MAX/MIN: yellow LED	R: yellow LED		
Output circuits			**11-12/14, 21-22, 31-32**	**15-16/18, 25-26/28**		
Kind of output			1 c/o + 2 n/c contacts	2 c/o contacts		
Operational principle [1]			open-circuit principle	open- and closed-circuit principle		
Contact material			AgCdo			
Rated operational voltage U_e	(IEC/EN 60947-1)		250 V	400 V		
Minimum switching voltage / minimum switching current			- / -			
Maximum switching voltage			250 V	400 V		
Rated operational current I_e (IEC/EN 60947-5-1)	AC12 (resistive)	230 V	4 A	5 A		
	AC15 (inductive)	230 V	3 A			
	DC12 (resistive)	24 V	4 A	5 A		
	DC13 (inductive)	24 V	2 A	2.5 A		
AC rating (UL 508)	Utilization category (Control Circuit Rating Code)		B 300			
	max. rated operational voltage		300 V AC			
	max. continuous thermal current at B 300		5 A			
	max. making/breaking apparent power at B 300		3600/360 VA			
Mechanical lifetime			30 x 10^6 switching cycles			
Electrical lifetime (AC12, 230 V, 4 A)			0.3 x 10^6 switching cycles	0.1 x 10^6 switching cycles		
Max. fuse rating to achieve short circuit protection	n/c / n/o contact		4 A fast-acting / 6 A fast-acting			
General data						
Diemensions (W X H X D)			45 x 78 x 100 mm (1.77 x 3.07 x 3.94 in)			
Mounting position			any			
Degree of protection	enclosure / terminals		IP50 / IP20			
Ambient temperature range	operation / storage		-25...+65 °C / -40...+85 °C			
Mounting			DIN rail (IEC/EN 60715)			
Electrical connection						
Wire size	fine-strand with wire end ferrule		2 x 2.5 mm² (2 x 14 AWG)			
Standards						
Product standard			IEC 255-6, EN 60255-6			
Low Voltage Directive			2006/95/EG			
EMC Directive			2004/108/EG			
Electromagnetic compatibility			-			
electrostatic discharge	IEC/EN 61000-4-2		Level 3 (6 kV / 8kV)			
radiated, radio-frequency, electromagnetic field	IEC/EN 61000-4-3		Level 3 (10 V/m)			
electrical fast transient / burst	IEC/EN 61000-4-4		Level 3 (2 kV / 5 kHz)			
surge	IEC/EN 61000-4-5		Level 4 (2 kV L-L)			
conducted disturbances, induced by radio-frequency fields	IEC/EN 61000-4-6		Level 3 (10 V)			
Resistance to vibration (IEC 68-2-6)			5 g			
Mechanical resistance (IEC 68-2-6)			10 g			
Isolation data						
Rated insulation voltage between supply, measuring and output circuit (VDE 0110, IEC 60947)			250 V	500 V		
Rated impulse withstand voltage between all isolated circuits (VDE0 110, IEC 664)			4 kV / 1.2 - 50 µs			
Test voltage between all isolated circuits			2,5 kV, 50 Hz, 1 min.			
Pollution category (VDE 0110, IEC 664, IEC 255-5)			3 / C			
Overvoltage category (VDE 0110, IEC 664, IEC 255-5)			III / C			
Environmental testing (IEC 68-2-30)			24 h cycle time, 55 °C, 93 % rel., 96 h			

[1] Open-circuit principle: Output relay energizes if the measured value exceeds/drops below the adjusted threshold.
Closed-circuit principle: Output relay de-energizes if the measured value exceeds/drops below the adjusted threshold.

• **Approvals** 2/6

2CDC110004C0207