Inductive sensor
BI2U-EG08-AP6X-H1341

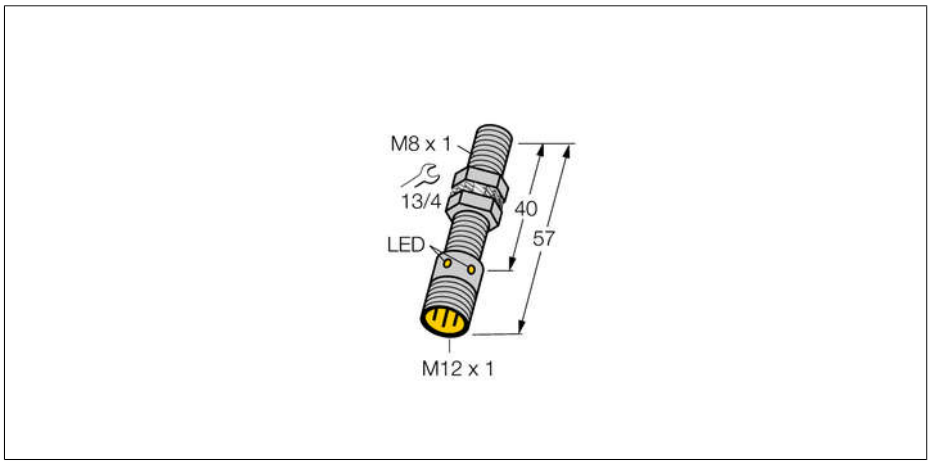

- **Threaded barrel, M8 x 1**
- **Stainless steel, 1.4404**
- **Factor 1 for all metals**
- **Protection class IP68**
- **Magnetic field immune**
- **High switching distance**
- **High switching frequency**
- **Recessed mounting possible**
- **DC 3-wire, 10…30 VDC**
- **NO contact, PNP output**
- **M12 x 1 connector**

Wiring diagram

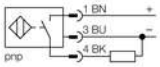

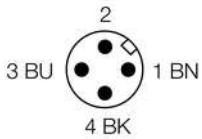

Type	BI2U-EG08-AP6X-H1341
Ident-No.	4602034
Rated operating distance Sn	2 mm
Mounting condition	flush
Assured sensing range	≤ (0,81 x Sn) mm
Repeatability	≤ 2 %
Temperaturdrift	10 %
	≤ ± 20 %, ≤ -25 °C v ≥ +70 °C
Hysteresis	3…15 %
Ambient temperature	-30…+85 °C
Operating voltage	10…30VDC
Residual ripple	≤ 10 % U_{ss}
DC rated operational current	≤ 150 mA
No-load current I_0	≤ 15 mA
Residual current	≤ 0.1 mA
Rated insulation voltage	≤ 0.5 kV
Short-circuit protection	yes/ cyclic
Voltage drop at I_e	≤ 1.8 V
Wire breakage / Reverse polarity protection	yes/ complete
Output function	3-wire, NO contact, PNP
Protection class	⧈
Switching frequency	2 kHz
Design	threaded barrel, M8 x 1
Dimensions	57 mm
Housing material	Metal, V4A (1.4404)
Material active face	Plastic, PP-GF30
Max. tightening torque housing nut	10 Nm
Connection	connector, M12 x 1
Vibration resistance	55 Hz (1 mm)
Shock resistance	30 g (11 ms)
Protection class	IP68
MTTF	874years acc. to SN 29500 (Ed. 99) 40 °C
Switching state	LED yellow

Functional principle

Inductive sensors detect metal objects contactless and wear-free. Due to the patented multi-coil system, *Uprox*®+ sensors have distinct advantages compared to conventional sensors. They excel in highest switching distances, maximum flexibility and operational reliability as well as efficient standardization.

Edition • 2012-06-23T08:47:48+02:00

Mounting instructions	minimum distances
Distance D	16 mm
Distance W	6 mm
Distance T	24 mm
Distance S	12 mm
Distance G	12 mm

Diameter of the active area B	Ø 8 mm

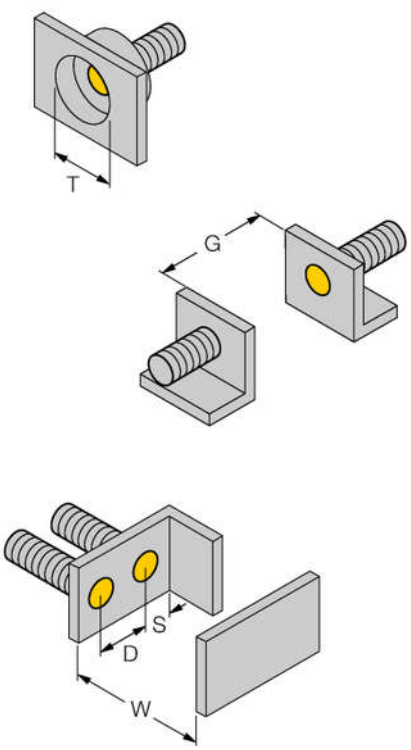

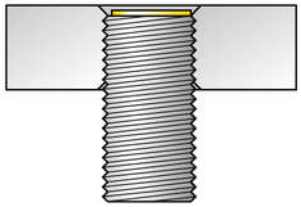

Flush and recessed mounting of all *uprox*®+ threaded barrel sensors. Safe operation is ensured if the sensor is screwed in by half a turn.

Accessories

Type code	Ident-No.	Short text	Dimension drawing
QM-08	6945100	Quick-mount bracket with dead-stop, chrome-plated brass, male thread M12 x 1. Note: The switching distance of proximity switches may be reduced through the use of quick-mount brackets.	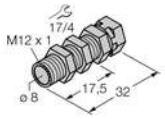
BST-08B	6947210	Fixing clamp for threaded barrel devices, with dead-stop; material: PA6	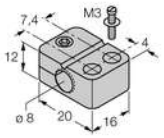
MW-08	6945008	Mounting bracket for threaded barrel devices; material: Stainless steel A2 1.4301 (AISI 304)	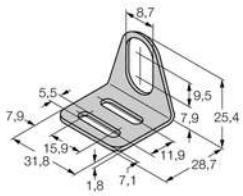
BSS-08	6901322	Mounting bracket for smooth and threaded barrel devices; material: Polypropylene	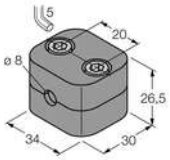

Edition • 2012-06-23T08:47:48+02:00