Brand of NTN corporation

Technical data



6009FT150ZZ

Single row deep groove ball bearings

TOPLINE deep groove ball bearing, radial contact, pressed steel cage, shields on both sides, applications up to 150°C.

TOPLINE

VISUAL (S)

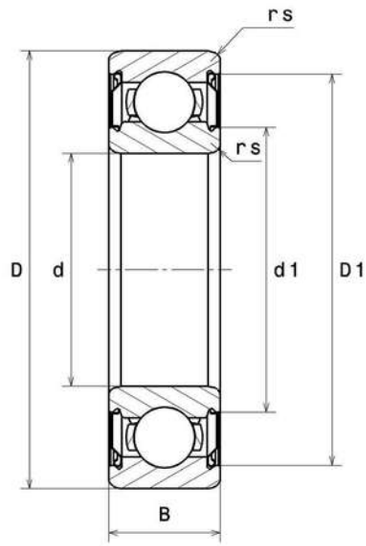

6009FT150ZZ

Single row deep groove ball bearings

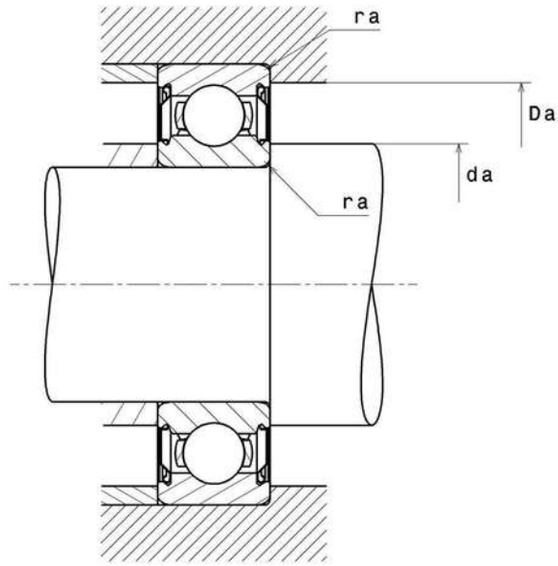

PRODUCT DEFINITION	
Brand	SNR
d - Internal diameter	45 mm
D - External diameter	75 mm
B - Bearing/Inner ring width	16 mm
d1 - External diameter inner ring	54,2 mm
D1 - Inner diameter outer ring	68,4 mm
rs - Min fillet radius	1 mm
Radial clearance class	C3
Mass	0,243 kg

PRODUCT PERFORMANCE	
C - Dynamic load	22100000 mN
C0 - Static load	15100000 mN
Cu - Fatigue limit load	690000 mN

6009FT150ZZ
Single row deep groove ball bearings

PRODUCT PERFORMANCE	
f0 - Coefficient	15.3
N lim - Mechanical Limit Speed	49200 °/s
Tmin - Min operating temperature	243,15 °K
Tmax - Max operating temperature	423,15 °K

BEARING FREQUENCIES	
BPFO - Over rolling frequency on outer ring (60 rpm)	5.554 Hz
BPFI - Over rolling frequency on inner (60 rpm)	7.446 Hz
BSF - Over rolling frequency on rolling element (60 rpm)	6.727 Hz
BRF - Rotational frequency – rolling element (60 rpm)	3.364 Hz
FTF - Rotational frequency - cage (60 rpm)	0.427 Hz

ABUTMENT	
da min - Min shoulder diameter IR	50 mm
da max - Max shoulder diameter IR	54,2 mm
Da max - Max shoulder diameter OR	70 mm
ra max - Max shaft & housing fillet radius	1 mm

INDUSTRY CALCUL FACTORS

Equivalent dynamic radial load

P = X.Fr + Y.Fa

$\frac{f_0 F_a}{C_0}$	e	Fa / Fr ≤ e		Fa / Fr > e	
		X	Y	X	Y
0.172	0.19	1	0	0.56	2.3
0.345	0.22				1.99
0.689	0.26				1.71
1.03	0.28				1.55
1.38	0.3				1.45
2.07	0.34				1.31
3.45	0.38				1.15
5.17	0.42				1.04
6.89	0.44				1

Equivalent static radial load

Po = Xo.Fr + Yo.Fa

X_0	Y_0
0.6	0.5

For single or DT bearing arrangement :

If Po <Fr, then use Po = Fr