A-A (1 : 1)

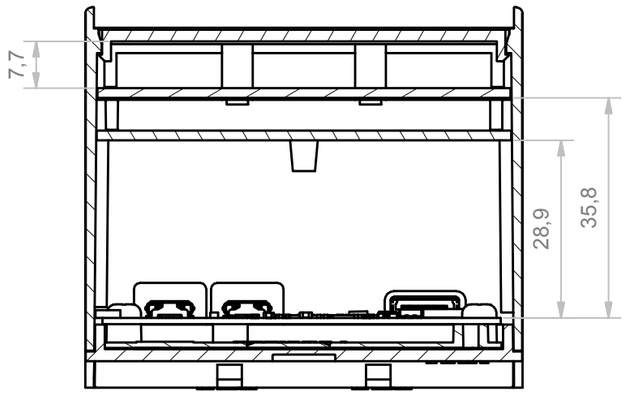

PCB TYPE	PCB DIMENSION	TOLERANCE
B	67.6X86.4X1.6	+/- 0.1
C	67.4X42.0X1.6	+/- 0.1

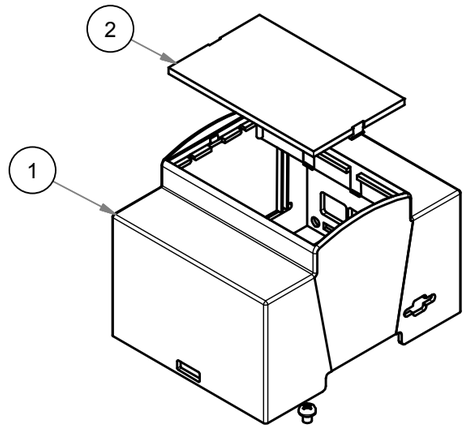

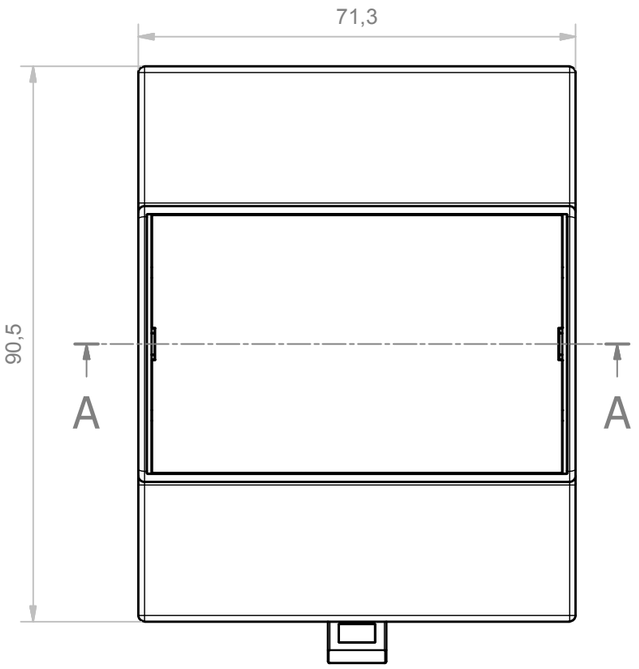

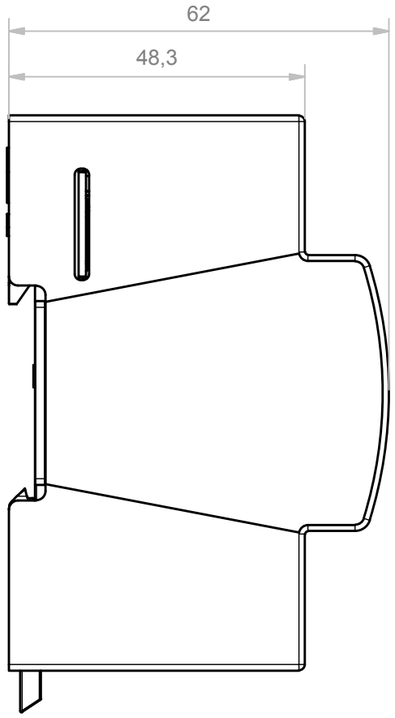

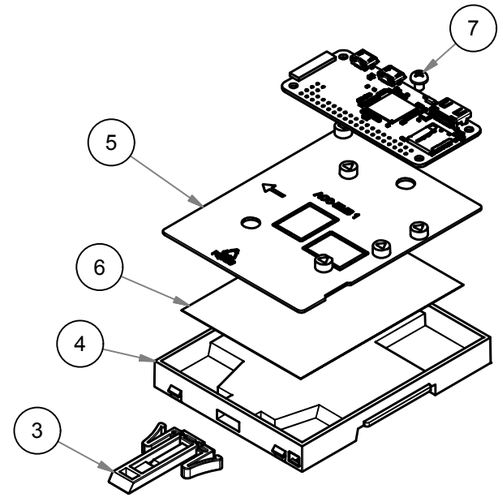

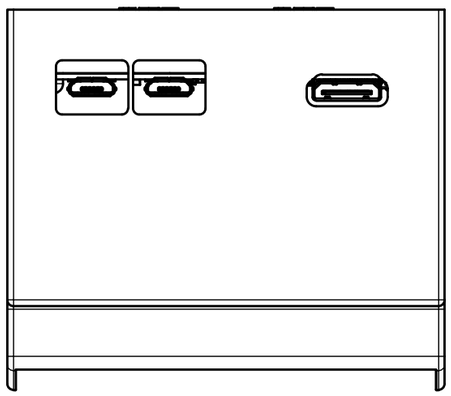

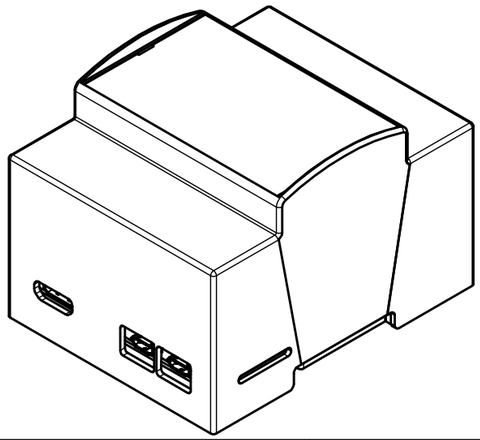

RIF.	Q.TY	DESCRIPTION	DRAWING
1	1	BODY ENCLOSURE 4M XTS RASPBERRY PI ZERO	2.050.00008
2	1	PANEL 4M WITHOUT FRAME	1.001.00346
3	1	MODULAR HOOK LONG	1.001.01900
4	1	BASE MODULBOX XT/XTS - 4M	1.001.01990
5	1	ACCESSORY FOR BASE EMBEDDED EMB1	2.050.00001
6	1	ADHESIVE FOR ACCESSORY BASE EMBEDDED	2.050.00005
7	2	SCREW 2.9 X 4.5 TC	8.100.00013

General Tolerance UNI EN 22768/1 Media (m)				
from 0.5 to 3	from 3 to 6	from 6 to 30	from 30 to 120	from 120 to 400
± 0.1	± 0.1	± 0.2	± 0.3	± 0.5

Scale:	Sheet nr.:	Drawed:	Checked:	Date:
1 : 1	1 / 1	N.R.	Fanin F.	20/03/2018

Dimension in mm

Material:	Weight:	Volume:
	-	-

italtronic enclosures for electronics
Hitaltech
A group of connecting technologies

Description:
CONTENITORE COMPLETO 4M XTS RASPBERRY PI ZERO
COMPLETE ENCLOSURE 4M XTS RASPBERRY PI ZERO

Drawing nr. 3.050.00003 | Rev. 01

5	4	3	2	1
Revision description				

5 Updated cartouche with new code (code passed M-07446-00). 20/03/18 N.R.

RESERVED PROPERTY:The present drawing cannot be reproduced or comunicated to 3d parties, even partially, without the authorization of ITALTRONIC Srl. Italtronic reserves to protect its own rights according to the law.