Your Expert Partner for **Human Machine Interfaces**

Actuator

Distribution by
Rs-online

61-
7000.02



https://rs-online.eao.com/component/61-7000.0...

Your product:



61-7000.02
Actuator

FRONT

Front form:	Round
Front bezel material:	Plastic

MOUNTING

Mounting cut-out:	Ø 22.3 mm
Mounting type:	Panel mounting

ELECTRICAL CHARACTERISTICS

Operating voltage:	10 - 26 V DC
Operation current:	20 mA

MECHANICAL CHARACTERISTICS

Terminal:	Plug-in terminal, 2.8 x 0.5 mm
Tightening torque:	Max. 0.5 Nm
Weight:	0.015 kg

ACOUSTICAL CHARACTERISTICS

Tone frequency:	ca. 2.0 kHz
Sound pressure:	82dB (A) ±8dB at a distance of 0.1m (IP65)

AMBIENT CONDITION

IP front protection:	IP40

Operating temperature:	– 25 °C ... + 55 °C
Storage temperature:	– 40 °C ... + 85 °C

CERTIFICATE

Conformities:	CE, UKCA, 2011 / 65 / EC (RoHS)
REACH:	REACH compliant
RoHS:	RoHS compliant

OTHER

Short Description:	Actuator, Ø 22.3 mm, Round, Plastic, Plug-in terminal, 2.8 x 0.5 mm, IP40
Housing material:	Plastic
Hints:	Change polarity for continuous or intermittent tone
Buzzer system:	Electronic non-contacting buzzer with IC oscillator

Wiring diagrams:



A = Continuous tone
B = Interval tone 2Hz

Mounting cut-outs:

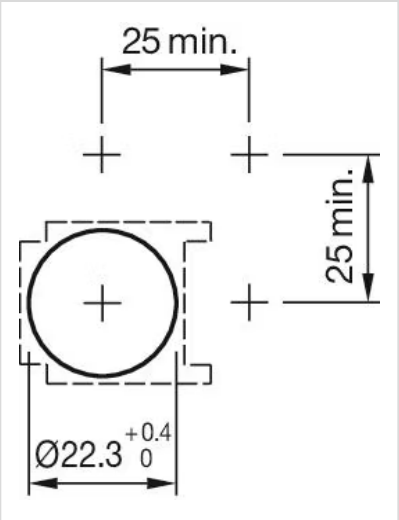

Dimension drawings:

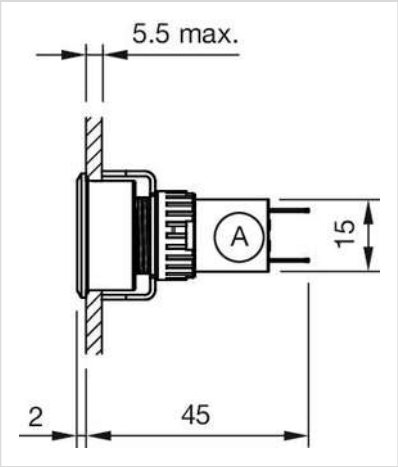

A = Plug-in terminal 2.8 mm x 0.5 mm