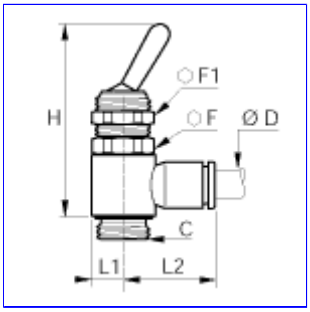

7801

SWITCH OPERATED 3 / 2 VALVE,MALE,OUTLET VERSION

for metric tubing

Zoom

Description
Dimensions
Specifications
CAD drawings
Related products

Display Part No for imperial tubing

convert weight standard : kg | oz

legris connectic	ØD (mm)	C	F (mm)	F1 (mm)	H (mm)	L1 (mm)	L2 (mm)	(kg)
7801 04 10	4	G1/8	14,0	14,0	42,5	7,0	18,5	0,024
7801 06 10	6	G1/8	14,0	14,0	42,5	7,0	20,0	0,025
7801 06 13	6	G1/4	17,0	17,0	51,0	9,0	22,0	0,048
7801 08 10	8	G1/8	14,0	14,0	42,5	7,0	25,0	0,026
7801 08 13	8	G1/4	17,0	17,0	51,0	9,0	27,0	0,049
7801 10 13	10	G1/4	17,0	17,0	51,0	9,0	29,0	0,005



7801
SWITCH OPERATED 3/2 VALVE,MALE,OUTLET VERSION

Description
Dimensions
Specifications
CAD drawings
Related products

direction of medium: one way

maximum working pressure	**bar** 10	**MPa** 1	**psi** 145
working temperature	**°C (Celsius)** From -10 to 80	**F (Farenheit)** From 14 to 176	**K (Kelvin)** From 263 to 353

body	engineering grade polymer
sub-base	nickel-plated brass
'O'-rings	nitrile