IG5842

Inductive sensor

IGA4008-CPKG/US-104

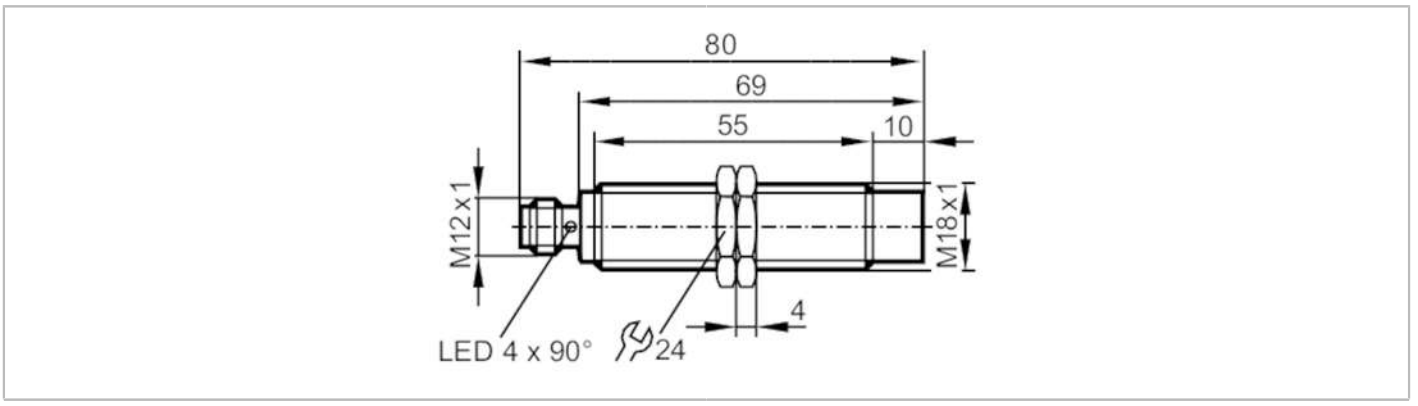

Product characteristics		
Electrical design		PNP
Output function		complementary
Sensing range	[mm]	8
Housing		threaded type
Dimensions	[mm]	M18 x 1 / L = 80
Electrical data		
Operating voltage	[V]	10...30 DC
Current consumption	[mA]	< 10
Protection class		II
Reverse polarity protection		yes
Outputs		
Electrical design		PNP
Output function		complementary
Max. voltage drop switching output DC	[V]	2.5
Permanent current rating of switching output DC	[mA]	200
Switching frequency DC	[Hz]	300
Short-circuit protection		yes
Overload protection		yes
Detection zone		
Sensing range	[mm]	8
Real sensing range Sr	[mm]	8 ± 10 %
Operating distance	[mm]	0...6.48
Accuracy / deviations		
Correction factor		steel: 1 / stainless steel: 0.7 / brass: 0.5 / aluminium: 0.4 / copper: 0.3
Hysteresis	[% of Sr]	3...15
Switch point drift	[% of Sr]	-10...10
Operating conditions		
Ambient temperature	[°C]	-25...80
Protection		IP 65

IG5842

Inductive sensor

IGA4008-CPKG/US-104

Tests / approvals			
EMC		EN 60947-5-2	
		EN 55011	class B
MTTF	[years]	1349	
Embedded software included		yes	

Mechanical data		
Weight	[g]	70.5
Housing		threaded type
Mounting		non-flush mountable
Dimensions	[mm]	M18 x 1 / L = 80
Thread designation		M18 x 1
Materials		brass white bronze coated; sensing face: PBT orange; LED window: PEI; lock nuts: brass white bronze coated

Displays / operating elements		
Display	switching status	1 x LED, yellow

Accessories	
Items supplied	lock nuts: 2

Remarks	
Pack quantity	1 pcs.

Electrical connection - plug

Connector: 1 x M12; coding: A



Connection

