E43311

Process adapter Tri-Clamp

ADAPT G1/2-CLAMP (1") 3A

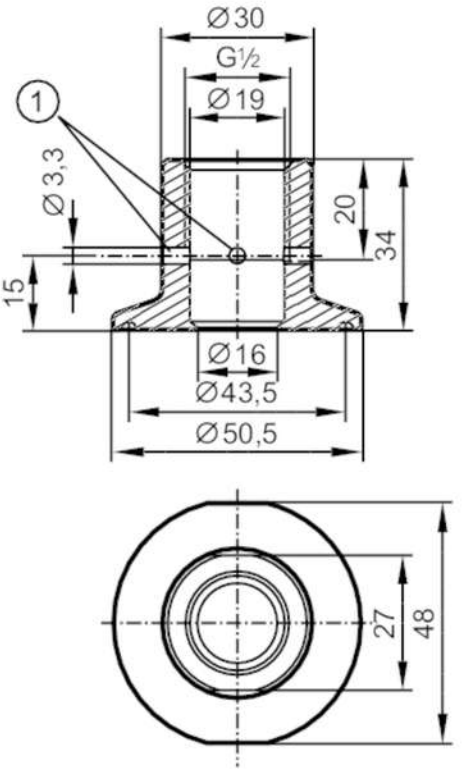

1 Leakage port

3A CRN EC 1935/2004 EHEDG Certified FCM FDA

Application		
Design		with leakage port
Pressure rating	[bar]	25
MAWP (for applications according to CRN)	[bar]	25
Mechanical data		
Weight	[g]	203
Materials		stainless steel (1.4435 / 316L)
Sensor connection		G 1/2 sealing cone
Process connection		Clamp DN25...DN40 (1...1,5") DIN 32676 (ISO 2852)
Surface characteristics Ra/Rz of the wetted parts		0.4 / 4
Remarks		
Pack quantity		1 pcs.