Brand of NTN corporation

Technical data

22326EF800

Spherical roller bearings



Spherical roller bearing for vibratory applications, one-piece machined cage, groove and lubrication holes on outer ring, special C4 class clearance

ULTAGE

VISUAL (S)

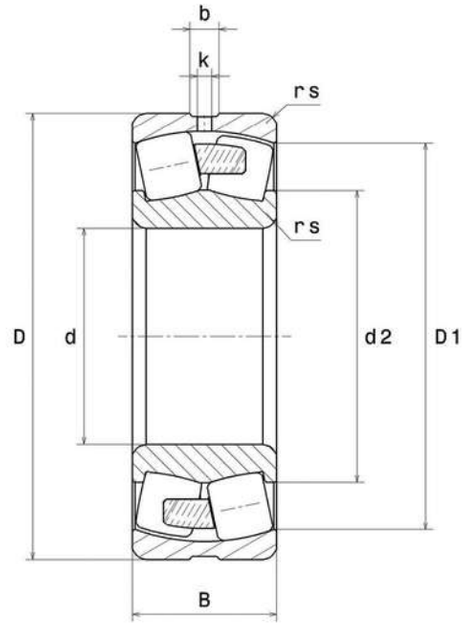

22326EF800
Spherical roller bearings

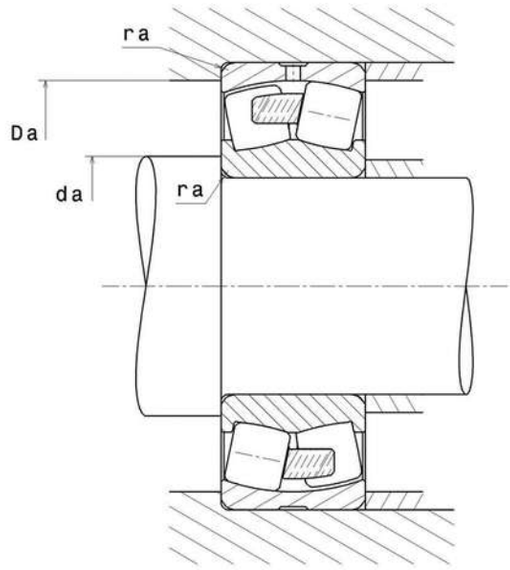

PRODUCT DEFINITION

Brand	SNR
d - Internal diameter	130 mm
D - External diameter	280 mm
B - Bearing/Inner ring width	93 mm
d2 - External diameter inner ring	0 mm
D1 - Inner diameter outer ring	243 mm
rs - Min fillet radius	4 mm
Number of lubrication holes	3 ou 4
b - Groove width	18,94 mm
k - Hole diameter	9 mm
Radial clearance class	C4 Special
Mass	27,9 kg

PRODUCT PERFORMANCE

22326EF800
Spherical roller bearings

PRODUCT PERFORMANCE	
C - Dynamic load	1330000000 mN
C0 - Static load	1400000000 mN
Cu - Fatigue limit load	136000000 mN
e - Coefficient	0.33
Y0 - Static axial load coefficient	2.01
Y1 - Lower axial load coefficient	2.06
Y2 - Upper axial load coefficient	3.06
N ref - Reference thermal speed	10800 °/s
N lim - Mechanical Limit Speed	14400 °/s
Tmin - Min operating temperature	233,15 °K
Tmax - Max operating temperature	473,15 °K

BEARING FREQUENCIES	
BPFO - Over rolling frequency on outer ring (60 rpm)	6.076 Hz
BPFI - Over rolling frequency on inner (60 rpm)	8.924 Hz
BSF - Over rolling frequency on rolling element (60 rpm)	4.961 Hz
BRF - Rotational frequency – rolling element (60 rpm)	2.481 Hz
FTF - Rotational frequency - cage (60 rpm)	0.405 Hz

ABUTMENT	
da max - Max shoulder diameter IR	0 mm
da min - Min shoulder diameter IR	147 mm
Da max - Max shoulder diameter OR	263 mm
ra max - Max shaft & housing fillet radius	3 mm

INDUSTRY CALCUL FACTORS

Equivalent dynamic radial load

$P = X.Fr + Y.Fa$

Fa / Fr ≤ e		Fa / Fr > e	
X	Y	X	Y
1	Y1	0.67	Y2

Equivalent static radial load

$Po = Xo.Fr + Yo.Fa$

X_0	Y_0
1	Y0

The values for e, Y1, Y2 and Y0 are shown in the above table .