

AS3552

Axial bearing washer

Axial bearing washers, suitable for AXK and K811, to DIN 5405-3/ISO 303

Technical information

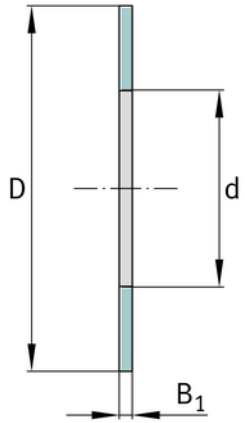

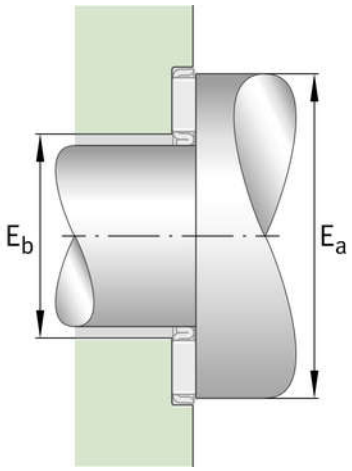

Main Dimensions & Performance Data

d	35 mm	Bore diameter bearing washer
D	52 mm	Outside diameter bearing washer
B_1	1 mm	Height bearing washer
≈m	8.4 g	Weight

The data sheet only contains an overview of the technical data of the selected product. Please refer to the additional documentation for this product. For further information, please use the following link on our website: Contact form