

Contact element, 2 N/C, front mount, screw connection

Part no. M22-K02SMC10
Article no. 121474
Catalog No. M22-K02SMC10Q

Powering Business Worldwide

Delivery programme

Product range			RMQ-Titan (drilling dimensions 22.5 mm)
Basic function			Accessories
Single unit/Complete unit			Element
Basic function accessories			Self-monitoring contact elements
Connection technique			Screw terminals
Fixing			Front fixing
Description			The N/O is actuated when mounted on the pushbutton.
Contacts			
N/O = Normally open			1 N/O
N/C = Normally closed			2 NC
Notes			= safety function, by positive opening to IEC/EN 60947-5-1
Actuator travel and actuation force as per DIN EN 60947-5-1, K.5.4.1			
	mm		4.8
Maximum travel	mm		5.7
Minimum force for positive opening	N		30
Contact sequence			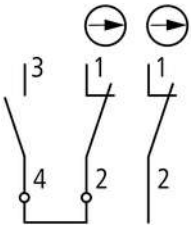
Contact travel diagram, stroke in connection with front element			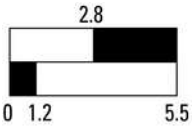
Configuration			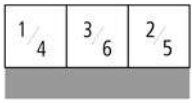
Degree of Protection			IP20
Connection to SmartWire-DT			no

Technical data

General

Standards			IEC 60947-5-1
Actuating force		n	10
Operating torque (screw terminals)		Nm	0.8
Degree of Protection			IP20
Climatic proofing			Damp heat, constant, to IEC 60068-2-78 Damp heat, cyclic, to IEC 60068-2-30
Ambient temperature			
Open		°C	-25 - +70
Terminal capacities		mm^2	
Solid		mm^2	0.75 - 2.5
Stranded		mm^2	0.5 - 2.5

Flexible with ferrule		mm^2	0.5 - 1.5

Contacts

Rated impulse withstand voltage	U_{imp}	V AC	6000
Rated insulation voltage	U_i	V	500
Overvoltage category/pollution degree			III/3
Max. short-circuit protective device			
Fuseless		Type	PKZM0-10/FAZ-B6/1
Fuse	gG/gL	A	10

Switching capacity

Rated operational current	I_e	A	
AC-15			
115 V	I_e	A	6
220 V 230 V 240 V	I_e	A	6
380 V 400 V 415 V	I_e	A	4
500 V	I_e	A	2
DC-13			
24 V	I_e	A	3
42 V	I_e	A	1.7
60 V	I_e	A	1.2
110 V	I_e	A	0.6
220 V	I_e	A	0.3

Auxiliary contacts

Rated conditional short-circuit current	Iq	kA	1

Design verification as per IEC/EN 61439

Technical data for design verification			
Rated operational current for specified heat dissipation	I_n	A	6
Heat dissipation per pole, current-dependent	P_{vid}	W	0.11
Equipment heat dissipation, current-dependent	P_{vid}	W	0
Static heat dissipation, non-current-dependent	P_{vs}	W	0
Heat dissipation capacity	P_{diss}	W	0
Operating ambient temperature min.		°C	-25
Operating ambient temperature max.		°C	70
IEC/EN 61439 design verification			
10.2 Strength of materials and parts			
10.2.2 Corrosion resistance			Meets the product standard's requirements.
10.2.3.1 Verification of thermal stability of enclosures			Meets the product standard's requirements.
10.2.3.2 Verification of resistance of insulating materials to normal heat			Meets the product standard's requirements.
10.2.3.3 Verification of resistance of insulating materials to abnormal heat and fire due to internal electric effects			Meets the product standard's requirements.
10.2.4 Resistance to ultra-violet (UV) radiation			Meets the product standard's requirements.
10.2.5 Lifting			Does not apply, since the entire switchgear needs to be evaluated.
10.2.6 Mechanical impact			Does not apply, since the entire switchgear needs to be evaluated.
10.2.7 Inscriptions			Meets the product standard's requirements.
10.3 Degree of protection of ASSEMBLIES			Does not apply, since the entire switchgear needs to be evaluated.
10.4 Clearances and creepage distances			Meets the product standard's requirements.
10.5 Protection against electric shock			Does not apply, since the entire switchgear needs to be evaluated.
10.6 Incorporation of switching devices and components			Does not apply, since the entire switchgear needs to be evaluated.
10.7 Internal electrical circuits and connections			Is the panel builder's responsibility.
10.8 Connections for external conductors			Is the panel builder's responsibility.
10.9 Insulation properties			
10.9.2 Power-frequency electric strength			Is the panel builder's responsibility.
10.9.3 Impulse withstand voltage			Is the panel builder's responsibility.
10.9.4 Testing of enclosures made of insulating material			Is the panel builder's responsibility.

10.10 Temperature rise			The panel builder is responsible for the temperature rise calculation. Eaton will provide heat dissipation data for the devices.
10.11 Short-circuit rating			Is the panel builder's responsibility. The specifications for the switchgear must be observed.
10.12 Electromagnetic compatibility			Is the panel builder's responsibility. The specifications for the switchgear must be observed.
10.13 Mechanical function			The device meets the requirements, provided the information in the instruction leaflet (IL) is observed.

Technical data ETIM 6.0

Low-voltage industrial components (EG000017) / Auxiliary contact block (EC000041)

Electric engineering, automation, process control engineering / Low-voltage switch technology / Component for low-voltage switching technology / Auxiliary switch block (ecl@ss8.1-27-37-13-02 [AKN342010])

Number of contacts as change-over contact			0
Number of contacts as normally open contact			0
Number of contacts as normally closed contact			2
Rated operation current Ie at AC-15, 230 V		A	6
Type of electric connection			Screw connection
Model			Top mounting
Mounting method			Front fastening

Approvals

			IEC/EN 60947-5; UL 508; CSA-C22.2 No. 14-05; CSA-C22.2 No. 94-91; CE marking
			E340491
			NISD
			012528_C_000
			3211-03
			UL listed, CSA certified
			UL/CSA Type: -

Dimensions

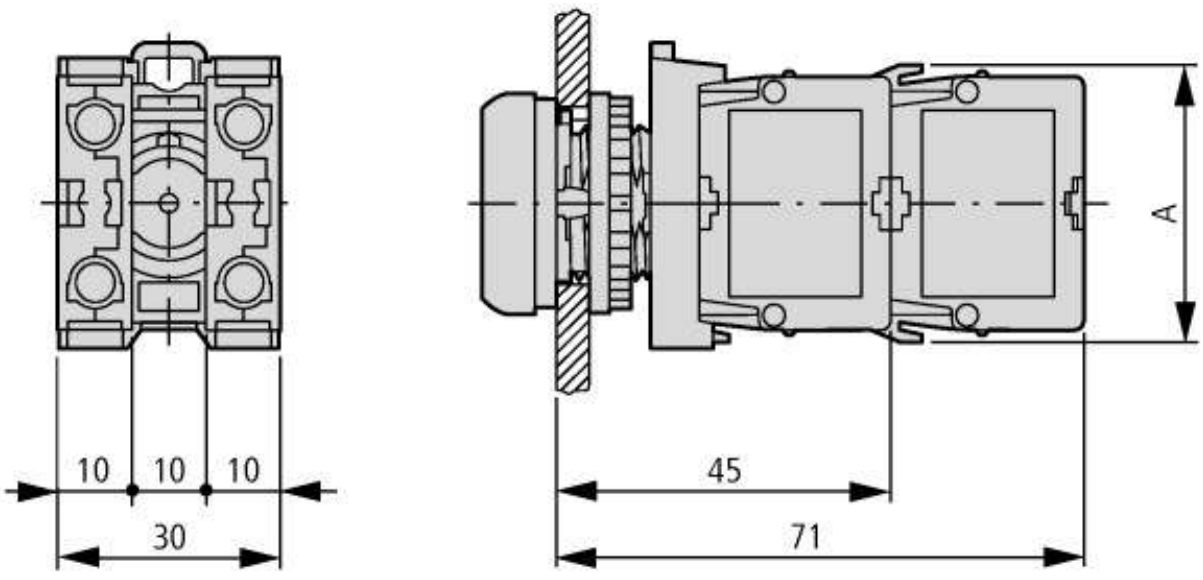

A = 37.2

Additional product information (links)

IL04716005Z RMQ-Titan: Emergency stop buttons, Emergency stop buttons	
IL04716005Z RMQ-Titan: Emergency stop buttons, Emergency stop buttons	ftp://ftp.moeller.net/DOCUMENTATION/AWA_INSTRUCTIONS/IL04716005Z2015_02.pdf
IL04716002Z RMQ-Titan System	
IL04716002Z RMQ-Titan System	ftp://ftp.moeller.net/DOCUMENTATION/AWA_INSTRUCTIONS/IL04716002Z2015_02.pdf

© 03/2016 by Eaton Industries GmbH