EvoSIGNAL / EvoSIGNAL Accessories

Midi Tube Adaptor RM GY



Part No.: 261.700.05

MECHANICAL DATA	
Height	64 mm
Diameter	85 mm
Materials	PC/ABS
Housing colour	Grey
Protection category	IP66
Cable entry	Through hole
Cable entry maximum	d = 9 mm
Type of fixing	Tube mounting
Working temperature minimum	-30°C
Working temperature maximum	+60°C
UL Type Rating	Type 12
Weight with packaging	59 g
Product weight	59 g

ELECTRICAL DATA	
Pollution degree	3

DRAWING

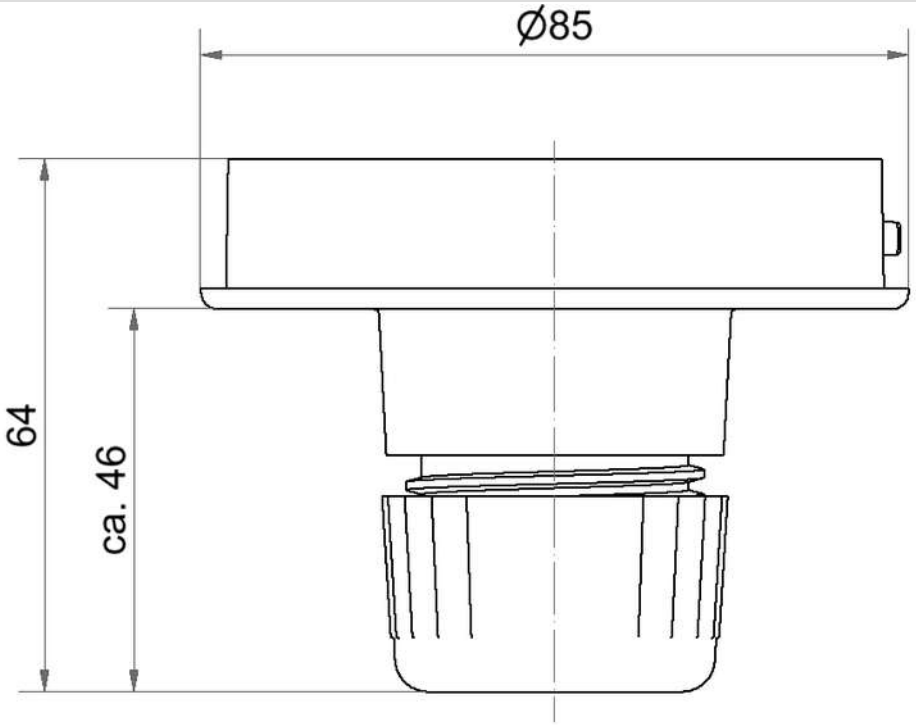

! For additional installation and mounting information, refer to the appropriate user guide at www.werma.com. This printed copy is for information only and is subject to alteration.