NN506A

Inductive sensor

INE2004DN/1D/1G/2G

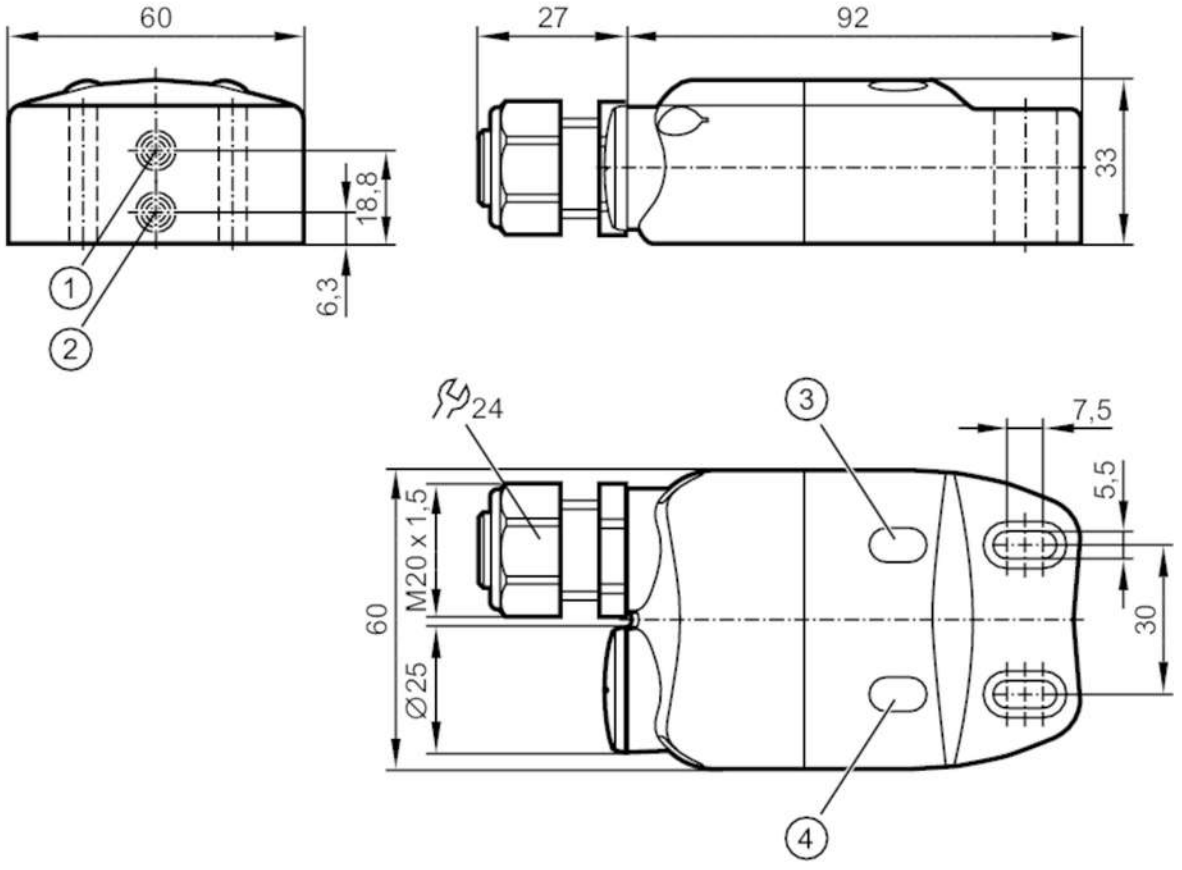

1 sensor 1
2 sensor 2
3 LED OUT 2
4 LED OUT 1

Product characteristics		
Output function		2 x normally closed
Sensing range	[mm]	4
Housing		rectangular
Dimensions	[mm]	33 x 60 x 119
Electrical data		
Connection to switching amplifiers		yes
Switching amplifiers		connection to certified intrinsically safe circuits with the max. values: U = 15 V / I = 50 mA / P = 120 mW
Operating voltage	[V]	8.2 DC; (1kΩ)
Supply voltage DC	[V]	7.5...15; (when used outside the hazardous area)
Current consumption	[mA]	< 1; (disabled; conductive: > 2,1)
Protection class		III
Actuator wiring		connection to certified intrinsically safe circuits of solenoid valves with the max. values: U = 28 V / I = 250 mA / P = 750 mW (bis 40 °C) / P = 650 mW (bis 70 °C); (When used in gas atmospheres (group II) the following maximum values are permitted: U = 28 V / P = 1,1 W; These values must not be exceeded.)

NN506A

Inductive sensor

INE2004DN/1D/1G/2G

Outputs			
Output function		2 x normally closed	
Switching frequency DC	[Hz]	500	
Overload protection		yes	
Detection zone			
Sensing range	[mm]	4	
Real sensing range Sr	[mm]	4 ± 10 %	
Operating distance	[mm]	0...3.25	
Accuracy / deviations			
Correction factor		steel: 1 / stainless steel: 0.7 / brass: 0.5 / aluminium: 0.4 / copper: 0.3	
Hysteresis	[% of Sr]	1...15	
Switch point drift	[% of Sr]	-10...10	
Operating conditions			
Ambient temperature	[°C]	-25...70	
Protection		IP 65; IP 67	
Tests / approvals			
Approval		BVS 14 ATEX E 005 X; IECEx BVS 14.0005X	
ATEX marking		II 1G Ex ia IIB T4 Ga Ta: -25...70 °C	
		II 2G Ex ia IIC T4 Gb Ta: -25...70 °C	
		II 1D Ex ia IIIB T135 °C Da Ta: -25...70 °C	
EMC		EN 60947-5-6	
Vibration resistance			10...55 Hz (1 mm)
Shock resistance			30 g (11 ms)
Safety classification			
Max. internal capacitance	[nF]	60; (per intrinsically safe circuit)	
Max. internal inductance	[µH]	130; (per intrinsically safe circuit)	
Mechanical data			
Weight	[g]	176.5	
Housing		rectangular	
Mounting		non-flush mountable	
Dimensions	[mm]	33 x 60 x 119	
Materials		housing: PA	
Displays / operating elements			
Display		switching status	2 x LED, yellow
Accessories			
Items supplied		socket head screws: 2 x M5 x 16	
		socket head screws: 2 x M3 x 25	
Remarks			
Remarks		The unit is not approved for safety-related tasks in the field of operator protection.	
Pack quantity		1 pcs.	

NN506A

Inductive sensor

INE2004DN/1D/1G/2G

Electrical connection

terminal strip in the terminal chamber: ...2.5 mm²; Cable gland: M20 X 1.5

Connection

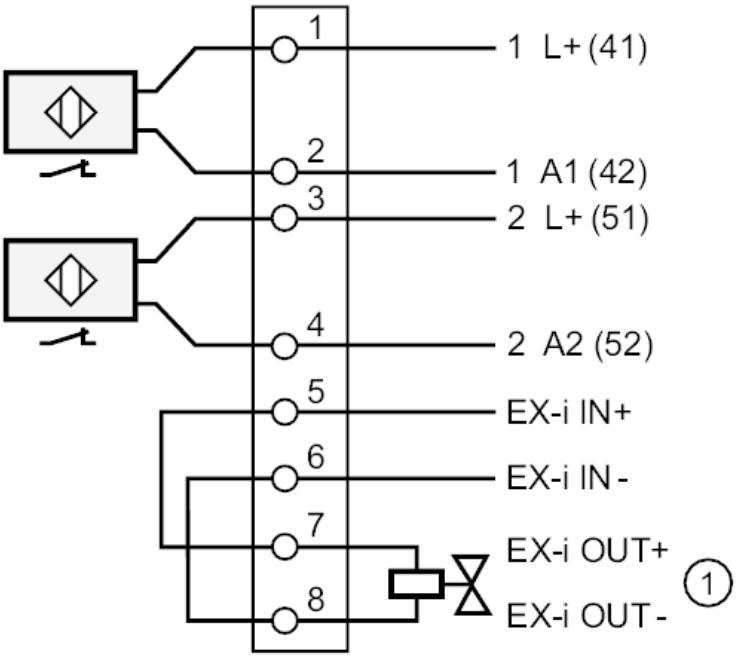

1	output solenoid valve