Ex position switch with safety function
Ex ES 98-11 -40°C
Material number: 1387893

Features/Options

- Ex zone 1 and 21
- Cold-resistant down to -40 °C
- Metal enclosure
- Design to EN 50041
- Wiring compartment
- Actuator: Plunger
- Actuator type B to EN 50041
- Actuating speed max. 0.5 m/s with a vertical actuating angle of 0°
- N.B.: Please state required approvals for Brazil with your order!

Dimensions

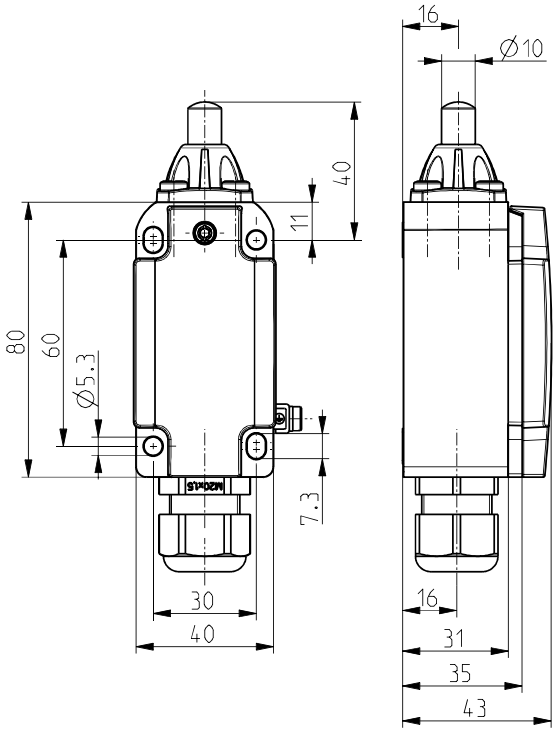

Technical data

Standards	EN 60947-5-1; EN 60079-0, EN 60079-1, EN 60079-7, EN 60079-31; EN ISO 13849-1; EN ISO 14119
Design	EN 50041
Enclosure	Corrosion-resistant aluminium, powder-coated, similar to RAL 7016
Cover	Stainless steel 1.4401, powder-coated, similar to RAL 1003
Switch type	type 1
Coding level	no coding
Degree of protection	IP 66 to IEC/EN 60529
Contact material	silver
Switching system	slow action, positive break NC contacts ⊖
Switching elements	1 NC/1 NO contact, type Zb
Connection	screw connection terminals
Cable cross-section	max. 1.5 mm² (incl. conductor ferrules)
Cable entry	1 x M20 x 1.5 for cable diameter 5 ... 9 mm
B_{10d} (10 % Load)	2 million
T_M	max. 20 years
U_{imp}	4 kV
U_i	250 V
I_e	max. 4.4 A T6 / max. 6.6 A T5
U_e	max. 250 VAC; 125 VDC
Utilisation category	AC-15; DC-13
Max. fuse rating	6 A gG/gN fuse
Ambient temperature	T6: - 40° C ... + 70° C (max. 4.4 A) T5: - 40° C ... + 70° C (max. 6.6 A)
Mechanical life	> 1 million operations
Operation cycles	1800/h
Repeat accuracy of switching points	± 0.1 mm
Impact energy	max. 7 J
Ex marking	⟨Ex⟩ II 2G Ex de IIC T6/T5 Gb, ⟨Ex⟩ II 2D Ex tb IIIC T80 °C/T95 °C Db IECEx Ex de IIC T6/T5 Gb, Ex tb IIIC T80 °C/T95 °C Db
Approvals	DMT 01 ATEX E 178 IECEx BVS 07.0014 INMETRO

steute Schaltgeräte GmbH & Co. KG | Brückenstraße 91, 32584 Löhne, Germany | Telefon +49 (0) 5731 745-0 | Telefax +49 (0) 5731 745-200 | info@steute.com | www.steute.com

Ex position switch with safety function
Ex ES 98-11 -40°C
Material number: 1387893

Errors and omissions excepted.

Contact diagram

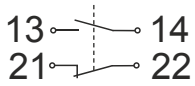

Switching diagram

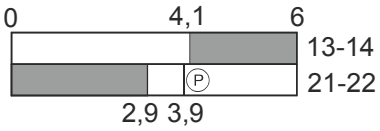

steute Schaltgeräte GmbH & Co. KG
Brückenstraße 91
32584 Löhne, Germany
Telefon +49 (0) 5731 745-0
Telefax +49 (0) 5731 745-200
info@steute.com
www.steute.com