Brand of NTN corporation

Technical data

5205NRZZG15

Double row angular contact ball bearings

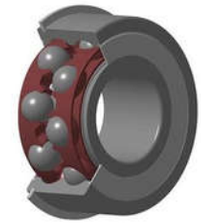

Double row angular contact ball bearing, polyamide cage, snap ring and groove on outer diameter, shield on both sides

VISUAL (S)

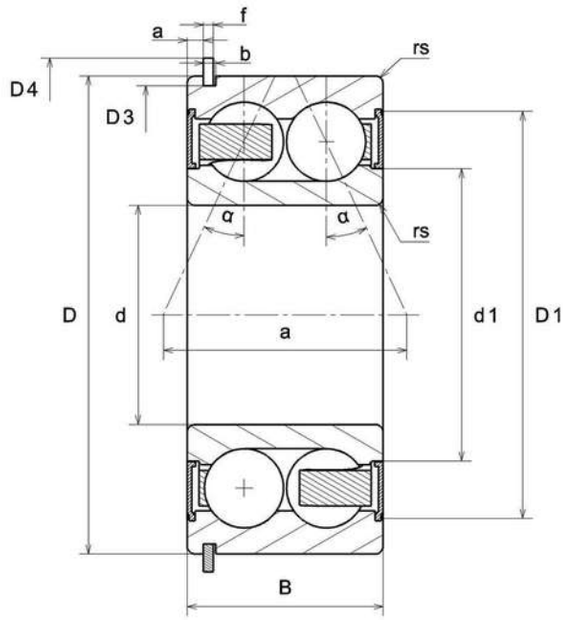

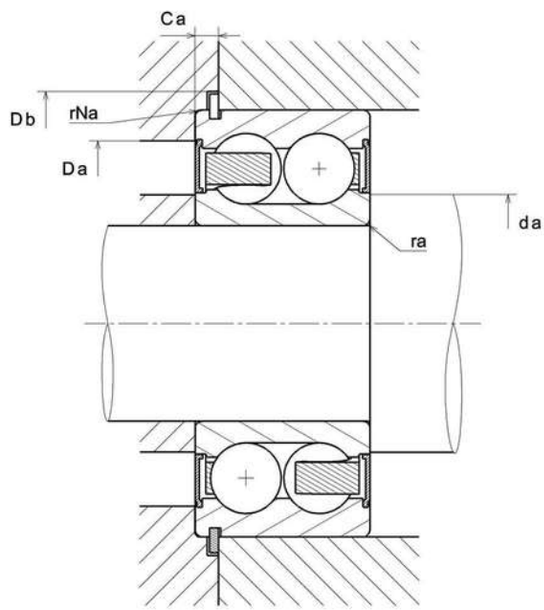

NTN Europe
1 rue des Usines · BP 2017 · 74010 Annecy Cedex · France · Tel. +33 (0)4 50 65 30 00
S.A. au capital de 322 639 919 € · RCS ANNECY B 325 821 072 · Id. Fiscale : FR 48 325 821 072
SIRET 325 821 072 00015 · Code APE 2815 Z · Code NACE 28.15

5205NRZZG15
Double row angular contact ball bearings

PRODUCT DEFINITION	
Brand	SNR
d - Internal diameter	25 mm
D - External diameter	52 mm
B - Bearing/Inner ring width	20,6 mm
d1 - External diameter inner ring	33,5 mm
D1 - Inner diameter outer ring	46,2 mm
a - Charge load application point	26,5 mm
- Contact angle	25 °
a min - Min position Groove	2,31 mm
a max - Max position groove	2,46 mm
rs - Min fillet radius	1 mm
rNs - Min fillet radius	0,6 mm
D3 - Max bottom groove diameter	49,73 mm
b min - Min groove width	1,35 mm
b max - Max groove width	1,65 mm
r0 max - Max bottom groove radius	0,4 mm
D4 max - Max outer diameter of assembled stop ring	57,9 mm
f - Stop ring thickness	1,07 mm
Snap ring reference	R 52
Radial clearance class	CN
Precision class	P0
Mass	0,159 kg

5205NRZZG15
Double row angular contact ball bearings

PRODUCT PERFORMANCE	
C - Dynamic load	20600000 mN
C0 - Static load	14700000 mN
Cu - Fatigue limit load	910000 mN
f0 - Coefficient	14.3
N ref - Reference thermal speed	58200 °/s
N lim - Mechanical Limit Speed	60000 °/s
Tmin - Min operating temperature	253,15 °K
Tmax - Max operating temperature	393,15 °K

BEARING FREQUENCIES	
BPFO - Over rolling frequency on outer ring (60 rpm)	3.67 Hz
BPFI - Over rolling frequency on inner (60 rpm)	5.33 Hz
BSF - Over rolling frequency on rolling element (60 rpm)	4.746 Hz
BRF - Rotational frequency – rolling element (60 rpm)	2.373 Hz
FTF - Rotational frequency - cage (60 rpm)	0.408 Hz

ABUTMENT	
da min - Min shoulder diameter IR	30 mm
da max - Max shoulder diameter IR	33,5 mm
Da max - Max shoulder diameter OR	47 mm
Ca min - Mini segment position	3,33 mm
Ca max - Max segment position	3,58 mm
ra max - Max shaft & housing fillet radius	1 mm
rNa max - Max fillet radius on segment side	0,6 mm
Db min - Min stop ring position diameter	58,6 mm