COMPACT CYLINDERS ISO 21287
SERIES 32

Single and double-acting, non-rotating, auto-cushioned
Ø 12, 16, 20, 25, 32, 40, 50, 63, 80, 100, 125 mm



- In compliance with ISO 21287
- Compact design
- Wide range of models available in different diameters
- Auto-cushioned version available

Series 32 cylinders, thanks to their compactness, are suitable for installation in confined spaces.
Being in compliance with the ISO 21287 Standard, the cylinders Series 32 can be used in conjunction with mountings/accessories suitable with ISO 15552 standard.

General Data

Construction	Compact profile
Operation	Single and double acting, magnetic
Design	ISO 21287
Materials	Anodized AL body and end-blocks - rolled stainless steel AISI 303 rod Anodized AL piston - rod seal, end-block OR and piston seal in PU High temperatures: rod seal, OR end-block and piston in FKM (140°)
Mounting	With threaded holes on the end blocks Flange - feet - trunnion
Stroke min and max (*)	Ø 12-16 = 5-200 mm Ø20-25 = 5-300 mm Ø 32-40-50-63 = 5-400 mm Ø 80-100-125 = 5-500 mm
Operating temperature	0°C ÷ 80°C (with dry air -20°C)
Operating pressure	1 ÷ 10 bar (double-acting) 2 ÷ 10 bar (single-acting)
Fluid	Clean air without lubrication. If lubricated air is used it is recommended to use oil ISOVG32. Once applied the lubrication should never be interrupted.
Operation speed	10 ÷ 700 mm/sec. (without load)

(*) the minimum stroke for the use of the sensors is 10 mm.

Products designed for industrial applications. General terms and conditions for sale are available on www.camozzi.com
This document contains a description of the products offered by Camozzi Automation at time of publication.
For more complete and up to date information about the Camozzi Automation product range, please refer to our online catalogue at https://shop.camozzi.com

COMPACT CYLINDERS ISO 21287
SERIES 32 - STROKES

Standard strokes

✖ = Non-rotating ● = Double-acting, male/female rod thread;
■ = Single-acting, front/rear spring, male/female rod thread.

Ø	5	10	15	20	25	50	100	200	300	400	500
12	● ■	● ■	● ■	● ■	● ■	●	●	●			
16	● ■	● ■	● ■	● ■	● ■	●	●	●			
20	× ● ■	× ● ■	× ● ■	× ● ■	× ● ■	× ●	× ●	× ●	× ●		
25	× ● ■	× ● ■	× ● ■	× ● ■	× ● ■	× ●	× ●	× ●	× ●		
32	× ● ■	× ● ■	× ● ■	× ● ■	× ● ■	× ●	× ●	× ●	× ●	× ●	
40	× ● ■	× ● ■	× ● ■	× ● ■	× ● ■	× ●	× ●	× ●	× ●	× ●	
50	× ● ■	× ● ■	× ● ■	× ● ■	× ● ■	× ●	× ●	× ●	× ●	× ●	
63	× ● ■	× ● ■	× ● ■	× ● ■	× ● ■	× ●	× ●	× ●	× ●	× ●	
80	× ● ■	× ● ■	× ● ■	× ● ■	× ● ■	× ●	× ●	× ●	× ●	× ●	●
100	× ● ■	× ● ■	× ● ■	× ● ■	× ● ■	× ●	× ●	× ●	× ●	× ●	●
125	● ■	● ■	● ■	● ■	● ■	●	●	●	●	●	●

Coding example

32	M	2	A	032	A	050

32	SERIES	
M	VERSION M = Male rod thread, mounted with rod nut Mod. U F = Female rod thread R = Antirotation with flange (from Ø20 to Ø100; no single-acting) CM = Auto-cushioned with male rod thread, mounted with rod nut Mod. U (from Ø32 to Ø100) CF = Auto-cushioned with female rod thread (from Ø32 to Ø100)	
2	OPERATION 1 = single-acting, front spring (Only for version M and F) 2 = double-acting 3 = double-acting, through-rod 4 = single-acting, rear spring (Only for version M and F)	PNEUMATIC SYMBOLS CS06 CD08 (Only for version M, F and R) - CD23 (Only for version CM and CF) CD12 (Only for version M, F and R) - CD24 (Only for version CM and CF) CS08
A	MATERIALS A = anodized aluminium body, end blocks and piston, PU seals (rod, end-blocks OR and piston)	
032	BORES 012 = 12 mm 016 = 16 mm 020 = 20 mm 025 = 25 mm 032 = 32 mm 040 = 40 mm	050 = 50 mm 063 = 63 mm 080 = 80 mm 100 = 100 mm 125 = 125 mm
A	CONSTRUCTION A = standard	
050	STROKE (see the table)	
	SEAL OPTIONS = Standard V = Rod seal FKM W = High temperatures (up to 140°C) non-magnetic (only for version M and F)	
	ROD LENGTH = Standard (_ _ _) = Rod extended with _ _ _ mm	
	CERTIFICATIONS = Standard EX = ATEX	

Pneumatic symbols

The pneumatic symbols which have been indicated in the CODING EXAMPLE are shown below.

CD08

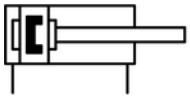

CD12

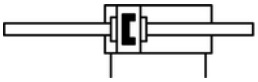

CD23

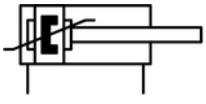

CD24

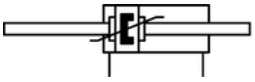

CS06

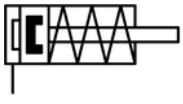

CS08



CD25

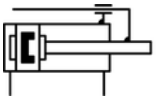

CD26

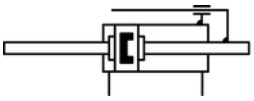

Products designed for industrial applications. General terms and conditions for sale are available on www.camozzi.com
This document contains a description of the products offered by Camozzi Automation at time of publication.
For more complete and up to date information about the Camozzi Automation product range, please refer to our online catalogue at https://shop.camozzi.com

Rod fork end Mod. G



Piston rod socket joint Mod. GY



Self aligning rod Mod. GK



Coupling piece Mod. GKF



Front flange Mod. D-E



Front/rear spot faced trunnion Mod. FN



Foot mount Mod. B-41



Opposed cylinder coupler Mod. DC-32



Front female trunnion Mod. H and C-H



Rear female trunnion Mod. C and C-H



Rear trunnion male Mod. L



Rear trunnion ball-joint Mod. R



90° male trunnion Mod. ZC

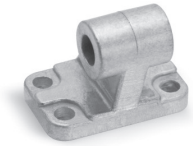

Swivel Combination Mod. C+L+S



Rear trunnion bracket Mod. I



Clevis pin Mod. S



Centring sleeve Mod. TR



Centring pin Mod. TS



Proximity switches Mod. CST



Piston rod lock nut Mod. U



Proximity switches Mod. CSG



All accessories are supplied separately.

Applicable loads

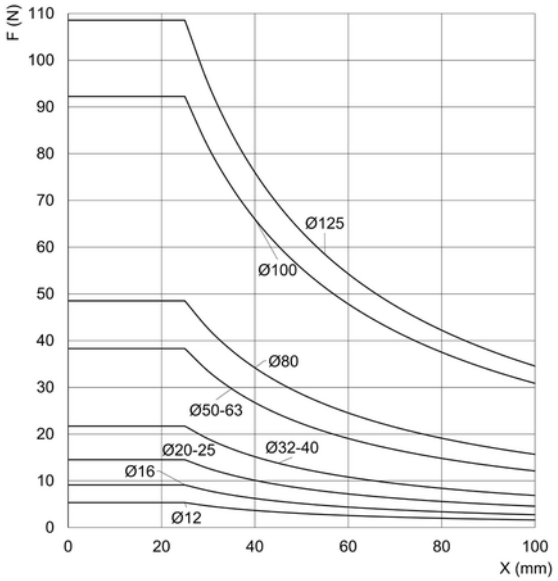

Version M, F
Operating 1, 2, 4 (see coding example)

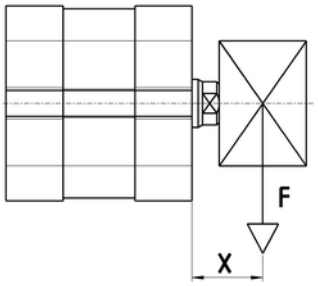

F = Transversal load
X = Dependant on stroke

Applicable loads

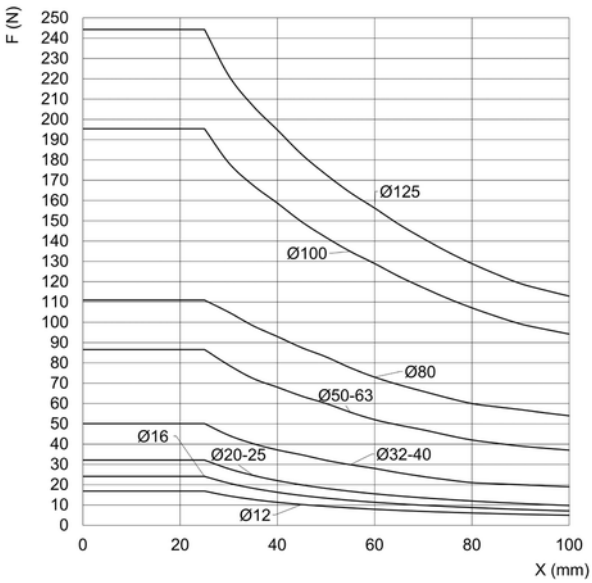

Version M, F
Operating 3 (see coding example)

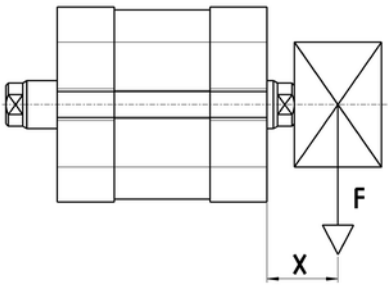

F = Transversal load
X = Dependant on stroke

Products designed for industrial applications. General terms and conditions for sale are available on www.camozzi.com
This document contains a description of the products offered by Camozzi Automation at time of publication.
For more complete and up to date information about the Camozzi Automation product range, please refer to our online catalogue at https://shop.camozzi.com

Applicable loads

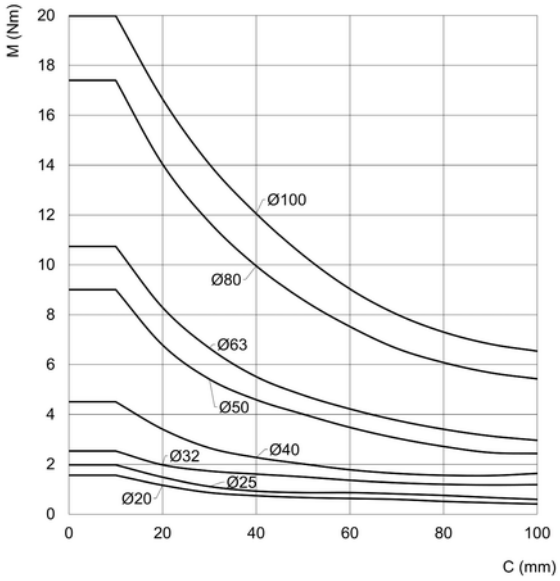

Version R
Operating 2 (See coding example)

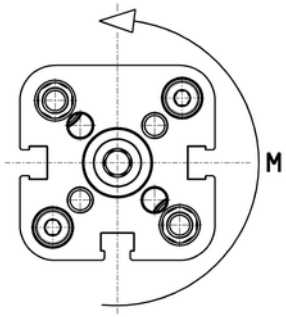

M = Torque moment
C = Dependant on stroke

Applicable loads

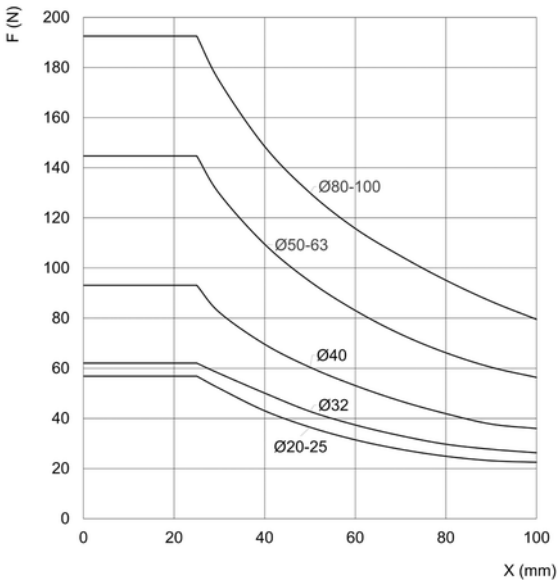

Version R
Operating 2 (see coding example)

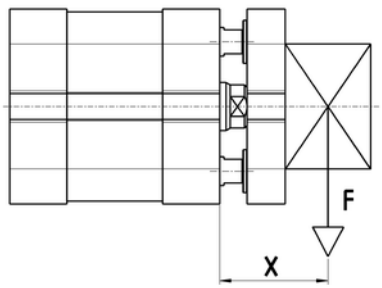

F = Transversal load
X = Dependant on stroke

Products designed for industrial applications. General terms and conditions for sale are available on www.camozzi.com
This document contains a description of the products offered by Camozzi Automation at time of publication.
For more complete and up to date information about the Camozzi Automation product range, please refer to our online catalogue at https://shop.camozzi.com

COMPACT CYLINDERS ISO 21287
SERIES 32 - DIAGRAMS

Applicable loads

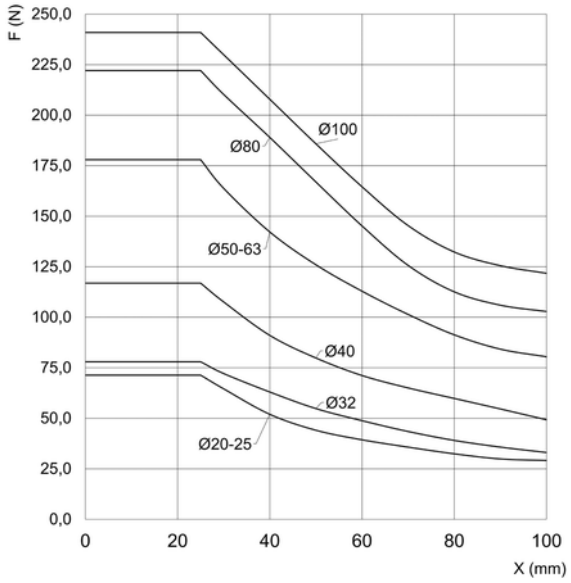

Version R
Operating 3 (see coding example)

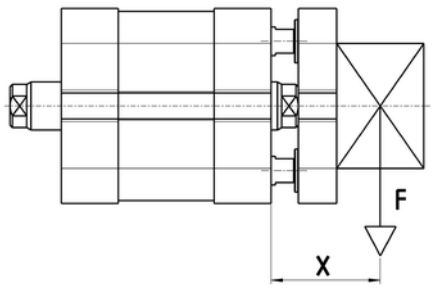

F = Transversal load
X = Dependant on stroke

Spring force single-acting cylinders

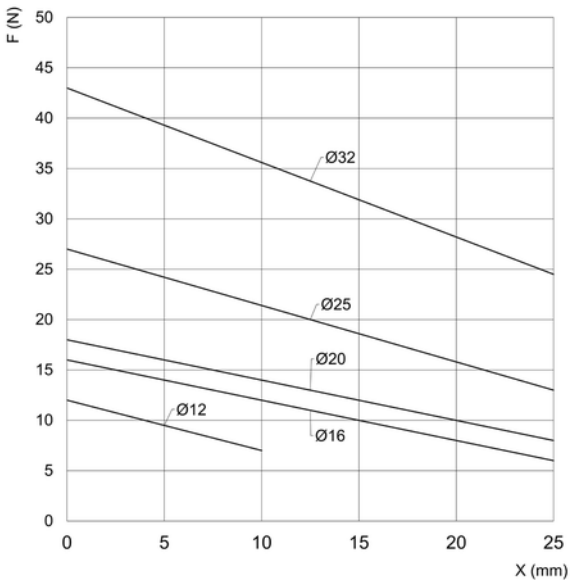

F = Force of spring
X = Stroke function

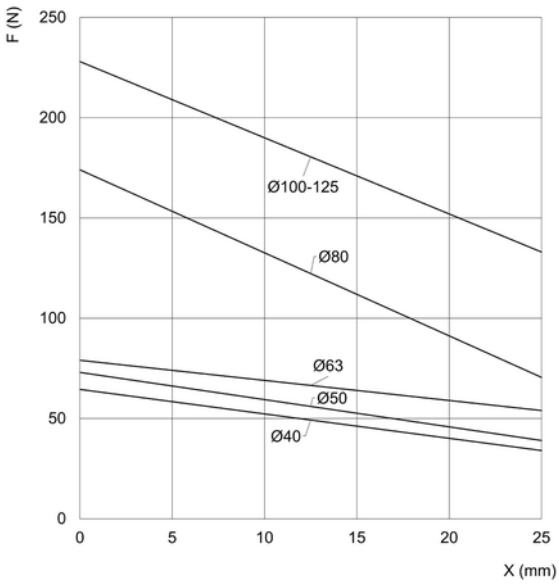

F = Force of spring
X = Stroke function

Products designed for industrial applications. General terms and conditions for sale are available on www.camozzi.com
This document contains a description of the products offered by Camozzi Automation at time of publication.
For more complete and up to date information about the Camozzi Automation product range, please refer to our online catalogue at https://shop.camozzi.com

Series 32 auto-cushioned: applicable mass according to the cylinder's speed

CHOICE OF THE AUTO-CUSHIONED CYLINDER

1) Choose the size according to the force needed in the application
2) Check on the graph* if the working conditions - mass and speed - intersect at a point below the curve that corresponds to the size chosen

m = mass applied to the cylinder (kg)
v = speed of the cylinder (mm/s)

Example:
Diameter = 50 mm;
Speed = 340 mm/s;
Max applicable mass = 50kg;

*Graphs obtained at a pressure of 5 bar.

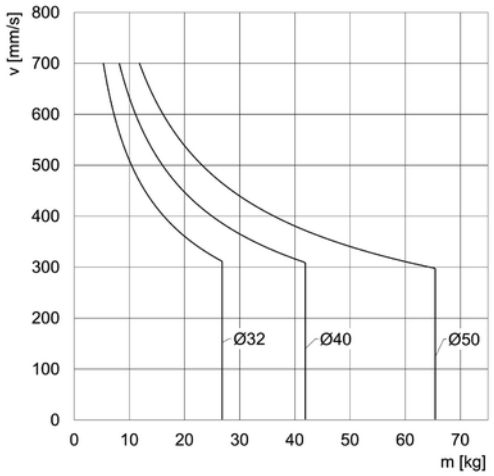

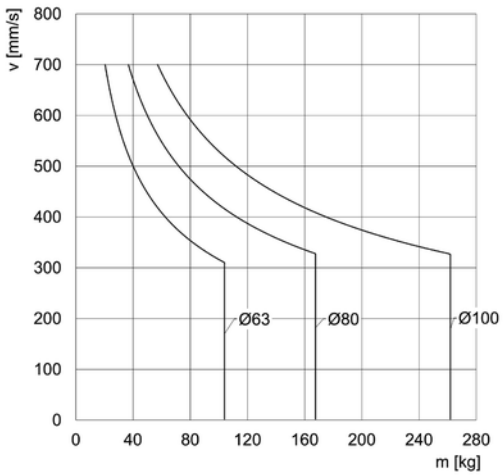

Mounting example

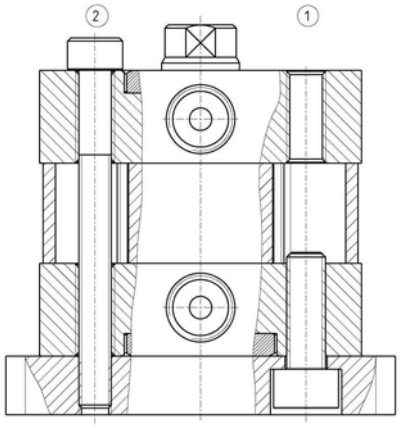

Mounting example for mounting cylinders Ø 32; 40; 50; 63; 80; 100; 125.
1 = Rear mounting
2 = Through mounting

N.B. For through mounting with screws through the cylinder it is recommended to use screws made from non-magnetic material. Cylinder Ø 125 has rear mounting (1) only.

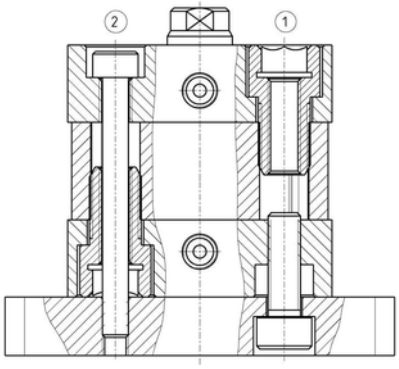

Mounting example for mounting cylinders Ø 12 - 16 -20 - 25.
1 = Rear mounting
2 = Through mounting

N.B. For through mounting with screws through the cylinder it is recommended to use screws made from non-magnetic material.

Products designed for industrial applications. General terms and conditions for sale are available on www.camozzi.com
This document contains a description of the products offered by Camozzi Automation at time of publication.
For more complete and up to date information about the Camozzi Automation product range, please refer to our online catalogue at https://shop.camozzi.com

Compact magnetic cylinders Mod. 32F and 32M



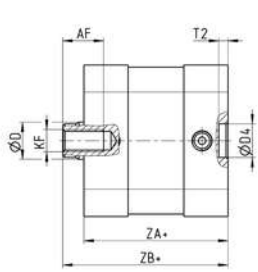

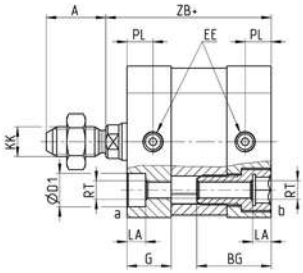

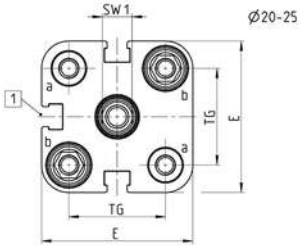

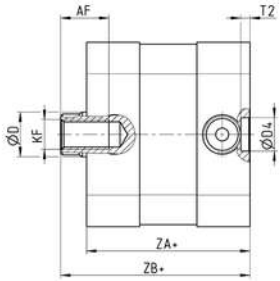

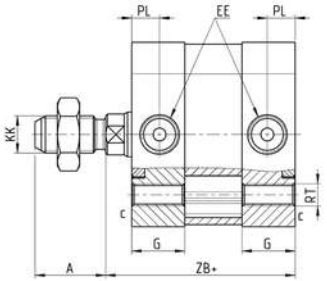

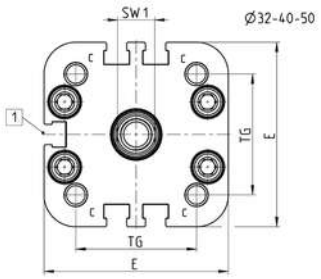

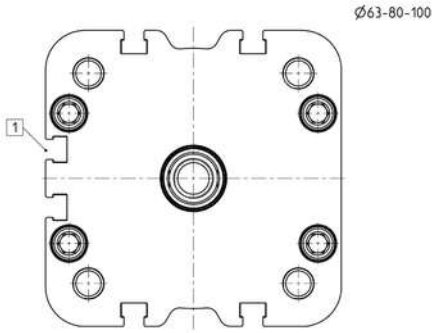

+ = add the stroke
1 = groove for sensor

Ø	A	AF	BG	G	øD	øD1	øD4	E	EE	KF	KK	LA	PL	RT	SW1	T2	TG	ZA +	ZB +
12	10	8	18	10,5	6	6	9	27,5	M5	M3	M5	3,5	6	M4	5	2,1	16	35	39,2
16	12	10	18,5	10,5	8	6	9	29	M5	M4	M6	3,5	6	M4	7	2,1	18	35	39,7
20	16	11	20	10,9	10	9	9	35,8	M5	M6	M8	5	6,5	M5	8	2,5	22	36,8	42,5
25	16	11	20	11,9	10	9	9	40,7	M5	M6	M8	5	7	M5	8	2,5	26	38,8	44,5
32	19	13	-	14,3	12	-	9	49,6	G1/8	M8	M10x1,25	-	7,6	M6	10	2,5	32,5	44	51
40	19	13	-	14,3	12	-	9	57	G1/8	M8	M10x1,25	-	7,6	M6	10	2,5	38	45	52
50	22	16	-	14,3	16	-	12	69,6	G1/8	M10	M12x1,25	-	7,6	M8	13	3	46,5	45	53
63	22	16	-	14	16	-	12	79,6	G1/8	M10	M12x1,25	-	7,6	M8	13	3	56,5	49	57
80	28	20	-	14,8	20	-	12	95,6	G1/8	M12	M16x1,5	-	7,7	M10	17	3	72	54	63,5
100	28	20	-	17,8	25	-	12	115,6	G1/8	M12	M16x1,5	-	8	M10	22	3	89	66,8	76,5
125	40	25	20	20	25	-	12	134,6	G1/4	M16	M20x1,5	-	10,5	M12	22	2,5	110	81	92

Products designed for industrial applications. General terms and conditions for sale are available on www.camozzi.com
This document contains a description of the products offered by Camozzi Automation at time of publication.
For more complete and up to date information about the Camozzi Automation product range, please refer to our online catalogue at https://shop.camozzi.com

Compact magnetic cylinders Mod. 32F3 and 32M3



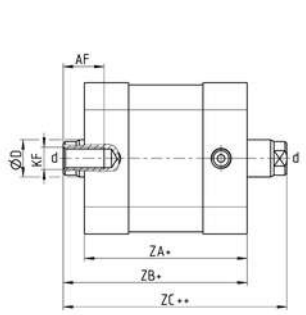

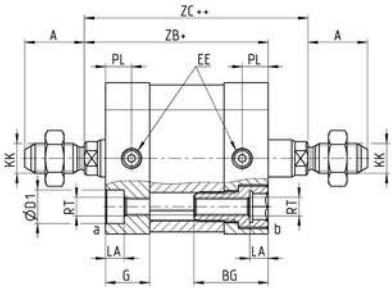

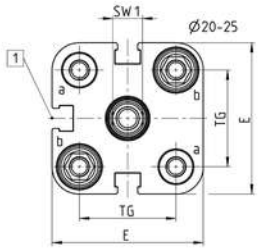

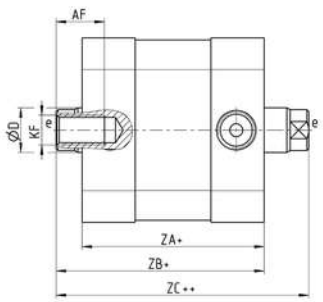

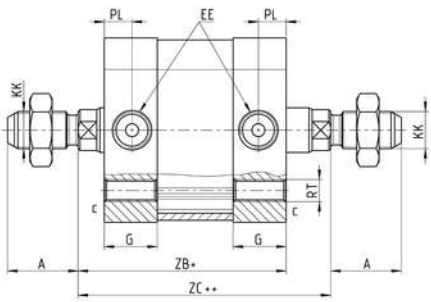

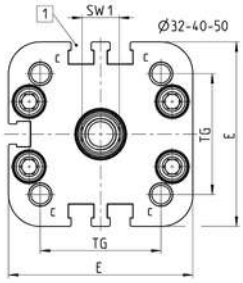

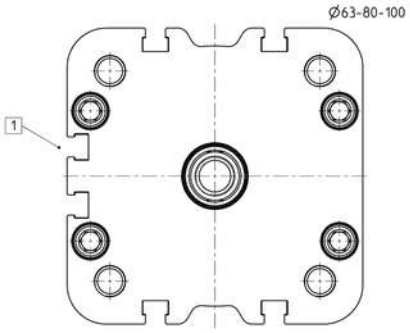

+ = add the stroke once
++ = add the stroke twice
1 = groove for sensor

Ø	A	AF	BG	G	øD	øD1	E	EE	KF	KK	LA	PL	RT	SW1	TG	ZA +	ZB +	ZC++
12	10	8	18	10,5	6	6	27,5	M5	M3	M5	3,5	6	M4	5	16	35	39,2	43,4
16	12	10	18,5	10,5	8	6	29	M5	M4	M6	3,5	6	M4	7	18	35	39,7	44,4
20	16	11	20	10,9	10	9	35,8	M5	M6	M8	5	6,5	M5	8	22	36,8	42,5	48,2
25	16	11	20	11,9	10	9	40,7	M5	M6	M8	5	7	M5	8	26	38,8	44,5	50,2
32	19	13	-	14,3	12	-	49,6	G1/8	M8	M10x1,25	-	7,6	M6	10	32,5	44	51	58
40	19	13	-	14,3	12	-	57	G1/8	M8	M10x1,25	-	7,6	M6	10	38	45	52	59
50	22	16	-	14,3	16	-	69,6	G1/8	M10	M12x1,25	-	7,6	M8	13	46,5	45	53	61
63	22	16	-	14	16	-	79,6	G1/8	M10	M12x1,25	-	7,6	M8	13	56,5	49	57	65
80	28	20	-	14,8	20	-	95,6	G1/8	M12	M16x1,5	-	7,7	M10	17	72	54	63,5	73
100	28	20	-	17,8	25	-	115,6	G1/8	M12	M16x1,5	-	8	M10	22	89	66,8	76,5	86,2
125	40	25	20	20	25	-	134,6	G1/4	M16	M20x1,5	-	10,5	M12	22	110	81	92	103

Compact magnetic cylinders Mod. 32R



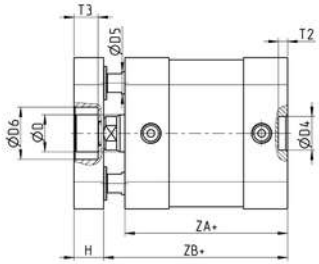

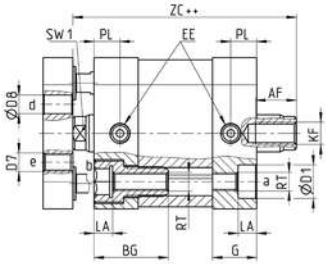

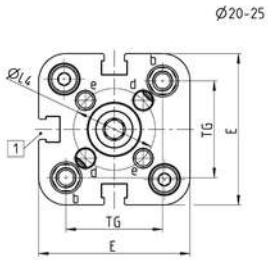

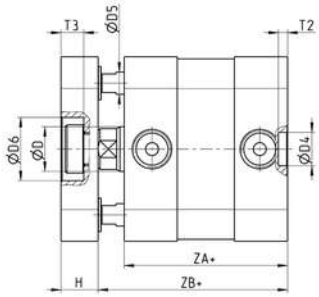

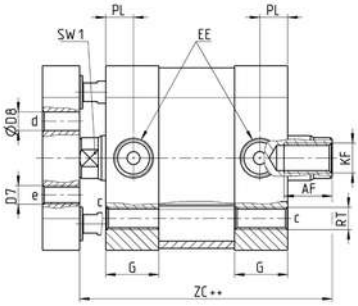

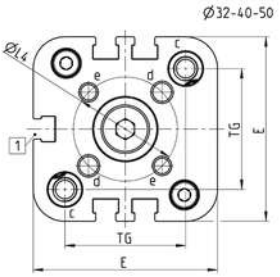

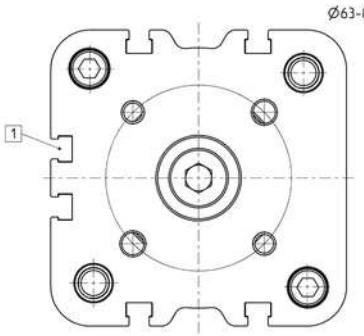

+ = add the stroke once
++ = add the stroke twice
1 = groove for sensor

Ø	AF	BG	G	øD	øD1	øD4	øD5	øD6	D7	øD8	E	EE	H	KF	LA	øL4	PL	RT	SW1	T2	T3	TG	ZA +	ZB +	ZC++
20	11	20	10,9	10	9	9	6	-	M4	4	35,8	M5	8	M6	5	17	6.5	M5	8	2.5	-	22	36.8	42.5	48.2
25	11	20	11,9	10	9	9	6	14	M5	5	40,7	M5	8	M6	5	22	7	M5	8	2.5	6.5	26	38.8	44.5	50.2
32	13	-	14,3	12	-	9	6	17	M5	5	49,6	G1/8	10	M8	-	28	7.6	M6	10	2.5	6	32.5	44	51	58
40	13	-	14,3	12	-	9	6	17	M5	5	57	G1/8	10	M8	-	33	7.6	M6	10	2.5	6	38	45	52	59
50	16	-	14,3	16	-	12	10	22	M6	6	69,6	G1/8	12	M10	-	42	7.6	M8	13	3	7	46.5	45	53	61
63	16	-	14	16	-	12	10	22	M6	6	79,6	G1/8	12	M10	-	50	7.6	M8	13	3	7	56.5	49	57	65
80	20	-	14,8	20	-	12	12	24	M8	8	95,6	G1/8	14	M12	-	65	7.7	M10	17	3	10.5	72	54	63.5	73
100	20	-	18	25	-	12	12	24	M10	10	115,6	G1/8	14	M12	-	80	8	M10	22	3	10.5	89	67	76.7	86.2

Products designed for industrial applications. General terms and conditions for sale are available on www.camozzi.com
This document contains a description of the products offered by Camozzi Automation at time of publication.
For more complete and up to date information about the Camozzi Automation product range, please refer to our online catalogue at https://shop.camozzi.com

Compact magnetic cylinders Mod. 32CF and 32CM



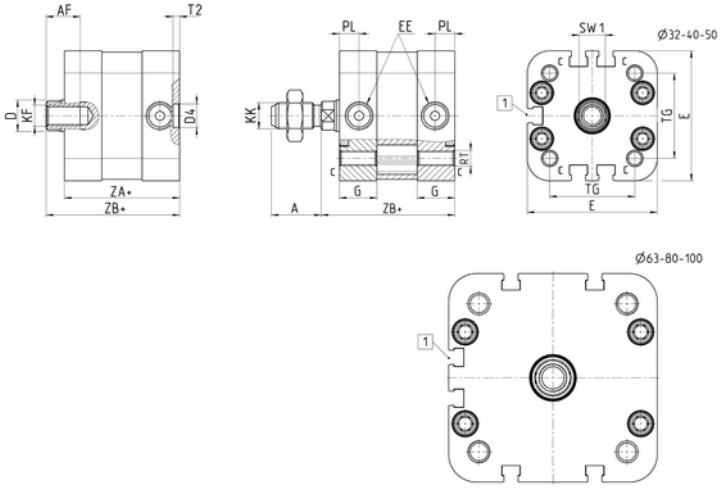

+ = add the stroke once
1 = groove for sensor

Ø	A	AF	G	øD	ØD4	E	EE	KF	KK	PL	RT	SW1	T2	TG	ZA +	ZB +
32	19	13	14,3	12	9	49,6	G1/8	M8	M10x1,25	7,6	M6	10	2,5	32,5	44	51
40	19	13	14,3	12	12	57	G1/8	M8	M10x1,25	7,6	M6	10	2,5	38	45	52
50	22	16	14,3	16	12	69,6	G1/8	M10	M12x1,25	7,6	M8	13	3	46,5	45	53
63	22	16	14	16	12	79,6	G1/8	M10	M12x1,25	7,6	M8	13	3	56,5	49	57
80	28	20	14,8	20	12	95,6	G1/8	M12	M16x1,5	7,7	M10	17	3	72	54	63,5
100	28	20	17,8	25	12	115,6	G1/8	M12	M16x1,5	8	M10	22	3	89	66,8	76,5

Compact magnetic cylinders Mod. 32CF3 and 32CM3



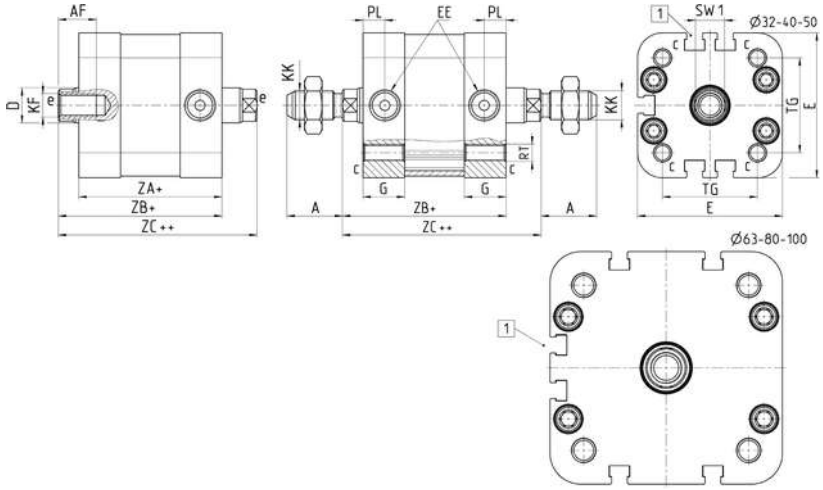

+ = add the stroke once
++ = add the stroke twice
1 = groove for sensor

Ø	A	AF	G	øD	E	EE	KF	KK	PL	RT	SW1	TG	ZA +	ZB +	ZC++
32	19	13	14,3	12	49,6	G1/8	M8	M10X1,25	7,6	M6	10	32,5	44	51	58
40	19	13	14,3	12	57	G1/8	M8	M10X1,25	7,6	M6	10	38	45	52	59
50	22	16	14,3	16	69,6	G1/8	M10	M12X1,25	7,6	M8	13	46,5	45	53	61
63	22	16	14	16	79,6	G1/8	M10	M12X1,25	7,6	M8	13	56,5	49	57	65
80	28	20	14,8	20	95,6	G1/8	M12	M16X1,5	7,7	M10	17	72	54	63,5	73
100	28	20	17,8	25	115,6	G1/8	M12	M16X1,5	8	M10	17	89	66,8	76,5	86,2

Products designed for industrial applications. General terms and conditions for sale are available on www.camozzi.com
This document contains a description of the products offered by Camozzi Automation at time of publication.
For more complete and up to date information about the Camozzi Automation product range, please refer to our online catalogue at https://shop.camozzi.com

COMPACT CYLINDERS ISO 21287
SERIES 32 - ACCESSORIES

Foot mount Mod. B



Material:
zinc plated steel

Supplied with:
2x feet mount
4x screws

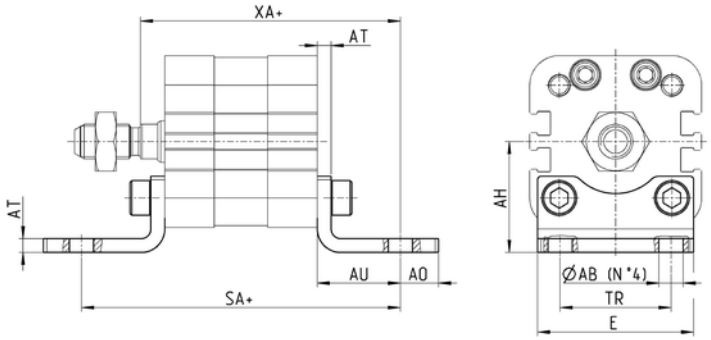

+ = add the stroke

Mod.	Ø	øAB	AH	AO	AU	AT	E	TR	SA +	XA+
B-32-12	12	5,5	21	5	13	3	26	16	61	52,2
B-31-12-16	16	5,5	22	7	13	3	28	18	61	52,7
B-32-20	20	6,5	27	9	16	4	35	22	68,8	58,5
B-31-25	25	6,5	29	9	16	4	39	26	70,8	60,5
B-41-32	32	7	32	11	24	4	45	32	92	75
B-41-40	40	10	36	15	28	4	53,5	36	101	80
B-41-50	50	10	45	15	32	4	62,5	45	109	85
B-41-63	63	10	50	15	32	5	73	50	113	89
B-41-80	80	12	63	20	41	6	92	63	136	104,5
B-41-100	100	14,5	71	25	41	6	108,5	71	148,8	117,5
B-32-125	125	16,5	90	25	45	7	132	90	171	137

Rear female trunnion Mod. C



Material:
aluminium

Supplied with:
1x female trunnion
4x screws

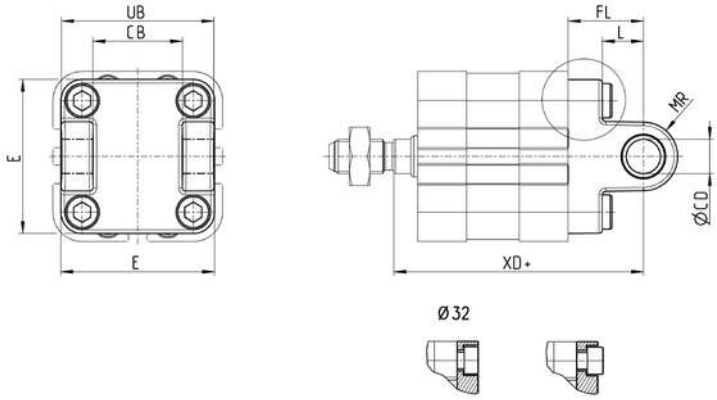

Mod.	Ø	øCD	E	CB	UB	L	FL	MR	XD+
C-41-32	32	10	47	26	46,5	12,5	22	10	73
C-41-40	40	12	52	28	52	16	25	12	77
C-41-50	50	12	64	32	60	16	27	12	80
C-H-41-63	63	16	74	40	70	21	32	16	89
C-H-41-80	80	16	94	50	90	22	36	16	99,5
C-H-41-100	100	20	114	60	110	27	41	20	117,5
C-H-32-125	125	25	140	70	130	30	50	25	142

Products designed for industrial applications. General terms and conditions for sale are available on www.camozzi.com
This document contains a description of the products offered by Camozzi Automation at time of publication.
For more complete and up to date information about the Camozzi Automation product range, please refer to our online catalogue at https://shop.camozzi.com

Rear female trunnion Mod. C-H



Material:
aluminium

Supplied with:
1x female trunnion
4x screws

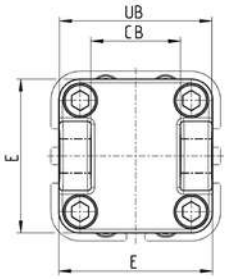

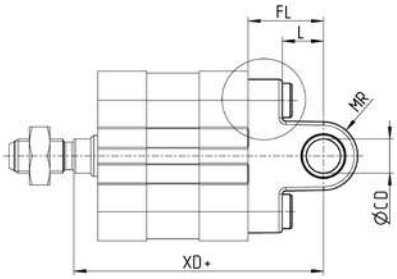

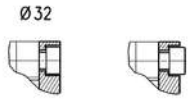

+ = add the stroke

Mod.	Ø	øCD	E	CB	UB	L	FL	MR	XD +
C-H-41-63	63	16	74	40	70	21	32	16	89
C-H-41-80	80	16	94	50	90	22	36	16	99,5
C-H-41-100	100	20	114	60	110	27	41	20	117,5
C-H-32-125	125	25	140	70	130	30	50	25	142

Front female trunnion Mod. H



Material:
aluminium

Supplied with:
1x female trunnion
4x screws

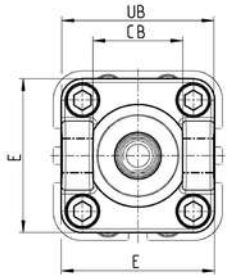

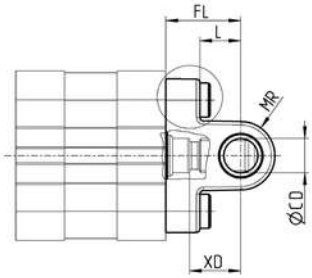

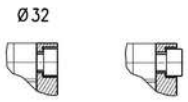

Mod.	Ø	øCD	E	CB	UB	L	FL	MR	XD+
H-41-32	32	10	47	26	46,5	12,5	22	10	15
H-41-40	40	12	52	28	52	16	25	12	18
H-41-50	50	12	64	32	60	16	27	12	19
H-60-63	63	16	74	40	70	21	32	16	24
C-H-41-80	80	16	94	50	90	22	36	16	26,5
C-H-41-100	100	20	114	60	110	27	41	20	31,3
C-H-32-125	125	25	140	70	130	30	50	25	41

Products designed for industrial applications. General terms and conditions for sale are available on www.camozzi.com
This document contains a description of the products offered by Camozzi Automation at time of publication.
For more complete and up to date information about the Camozzi Automation product range, please refer to our online catalogue at https://shop.camozzi.com

Front flange Mod. D-E

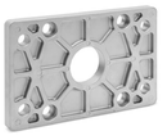

Material:
zinc-plated steel for Ø 16 - Ø 25;
aluminium for Ø 32 ÷ Ø 125;

Supplied with:
1x flange
4x screws

Material:
zinc-plated steel for Ø12 - Ø25; Ø250
aluminium for Ø32 ÷ Ø200
stainless steel 304 for Ø320

Supplied with:
1x flange
4x screws

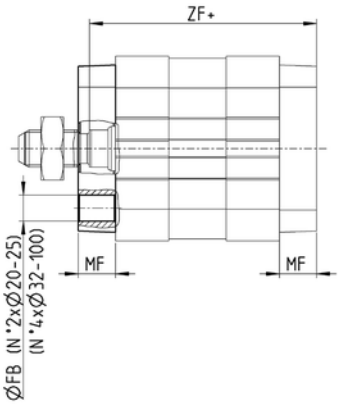

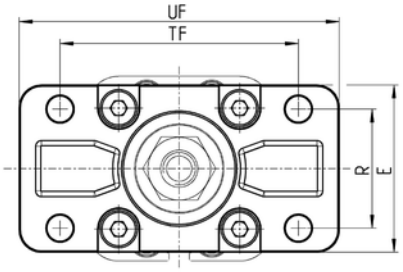

Mod.	Ø	øFB	E	MF	R	TF	UF	ZF +
D-E-31-12-16	16	5,5	29	10	-	43	55	49,7
D-E-32-20	20	6,6	36	10	-	55	70	52,5
D-E-32-25	25	6,6	40	10	-	60	76	54,5
D-E-41-32	32	7	45	10	32	64	80	61
D-E-41-40	40	9	52	10	36	72	90	62
D-E-41-50	50	9	65	12	45	90	110	65
D-E-41-63	63	9	75	12	50	100	120	69
D-E-41-80	80	12	95	16	63	126	150	79,5
D-E-41-100	100	14	115	16	75	150	170	92,5
D-E-41-125	125	16	140	20	90	180	220	112

Rear male trunnion Mod. L



Material:
aluminium

Supplied with:
1x male trunnion
4x screws

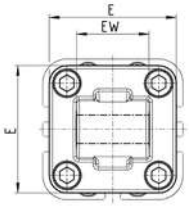

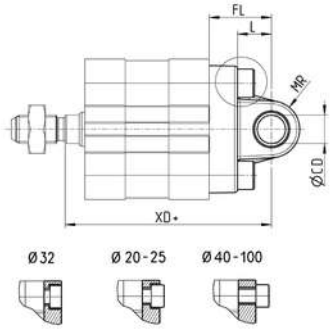

+ = add the stroke

Mod.	Ø	øCD	E	EW	L	FL	MR	XD +
L-31-12-16	16	6	30	12	10	16	6	55,7
L-32-20	20	8	34	16	14	20	8	62,5
L-32-25	25	8	38	16	14	20	8	64,5
L-41-32	32	10	47	26	12,5	22	10	73
L-41-40	40	12	52	28	16	25	12	77
L-41-50	50	16	64	32	16	27	12	80
L-41-63	63	16	74	40	21	32	15,5	89
L-41-80	80	20	94	50	22	36	16	99,5
L-41-100	100	20	114	60	27	41	20	117,5
L-32-125	125	25	140	70	30	50	25	142

Products designed for industrial applications. General terms and conditions for sale are available on www.camozzi.com
This document contains a description of the products offered by Camozzi Automation at time of publication.
For more complete and up to date information about the Camozzi Automation product range, please refer to our online catalogue at https://shop.camozzi.com

Trunnion ball-joint Mod. R



Material:
aluminium

Supplied with:
1x trunnion ball joint
4x screws

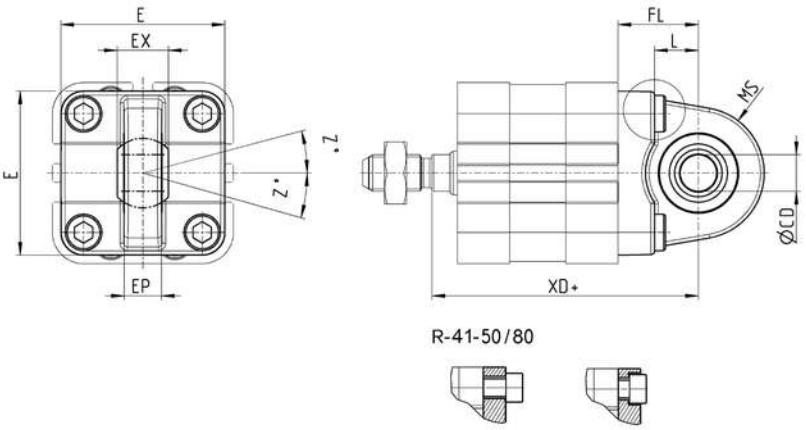

+ = add the stroke

Mod.	Ø	øCD	E	EX	EP	L	FL	MS	XD+	Z°
R-41-32	32	10	45	14	10,5	12	22	16	73	4
R-41-40	40	12	52	16	12	15	25	19	77	4
R-41-50*	50	12	62,5	16	12	15	27	21	80	4
R-50	50	16	65	21	15	16	27	21,5	80	4
R-41-63	63	16	75	21	15	20	32	24	89	4
R-41-80*	80	16	92	21	15	24	36	28	99,5	4
R-80	80	20	95	25	18	22	36	28,5	99,5	4
R-41-100	100	20	115	25	18	27	41	30	117,5	4
R-41-125	125	30	140	37	25	30	50	40	142	4

90° male trunnion Mod. ZC



CETOP RP 107P

Material:
aluminium

Supplied with:
1x male support

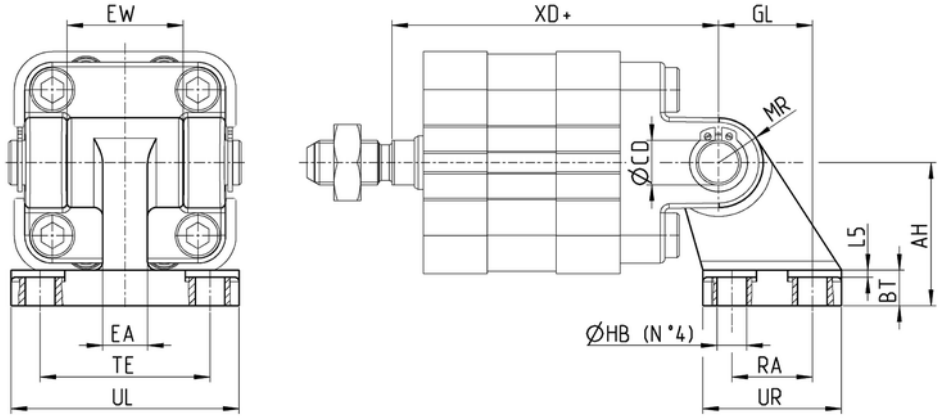

+ = add the stroke

Mod.	Ø	AH	BT	øCD	EA	EW	GL	øHB	L5	MR	RA	UL	UR	TE	XD+
ZC-32	32	32	8	10	10	26	21	6,6	1,6	10	18	51	31	38	73
ZC-40	40	36	10	12	15	28	24	6,6	1,6	11	22	54	35	41	77
ZC-50	50	45	12	12	16	32	33	9	1,6	13	30	65	45	50	80
ZC-63	63	50	14	16	16	40	37	9	1,6	15	35	67	50	52	89
ZC-80	80	63	14	16	20	50	47	11	2,5	15	40	86	60	66	99,5
ZC-100	100	71	17	20	20	60	55	11	2,5	19	50	96	70	76	117,5
ZC-125	125	90	20	25	30	70	70	14	3,2	22,5	60	124	90	94	142

Products designed for industrial applications. General terms and conditions for sale are available on www.camozzi.com
This document contains a description of the products offered by Camozzi Automation at time of publication.
For more complete and up to date information about the Camozzi Automation product range, please refer to our online catalogue at https://shop.camozzi.com

Accessory combination Mod. C+L+S



Material:
aluminium

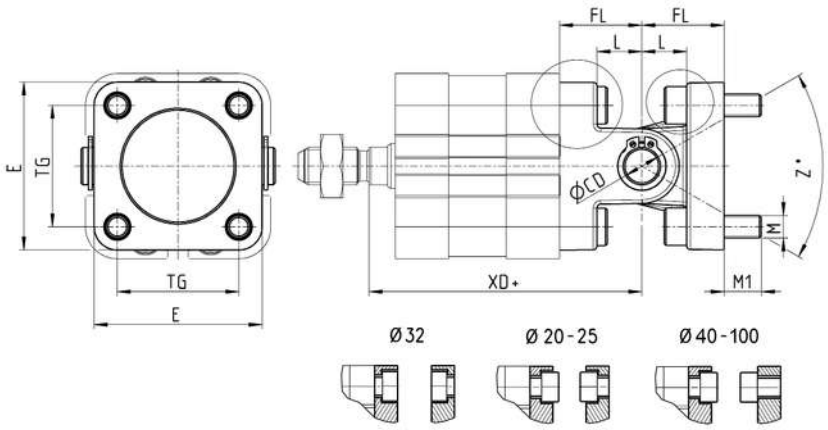

+ = add the stroke

Mod.	Ø	øCD	E	L	FL	M	M1	TG	XD +	Z° (max)
I-41-32	32	10	47	12,5	22	M6	10,5	32,5	73	30
I-41-40	40	12	52	16	25	M6	10,5	38	77	40
I-41-50	50	12	64	16	27	M8	11,5	46,5	80	25
I-41-63	63	16	74	21	32	M8	13,5	56,5	89	36
I-41-80	80	16	93	22	36	M10	15	72	99,5	34
I-41-100	100	20	114	27	41	M10	15	89	117,5	38
I-41-125	125	30	140	30	50	M12	15	110	142	30

Front spot faced trunnion Mod. FN



Material:
zinc-plated steel

Supplied with:
1x spot faced trunnion
4x screws

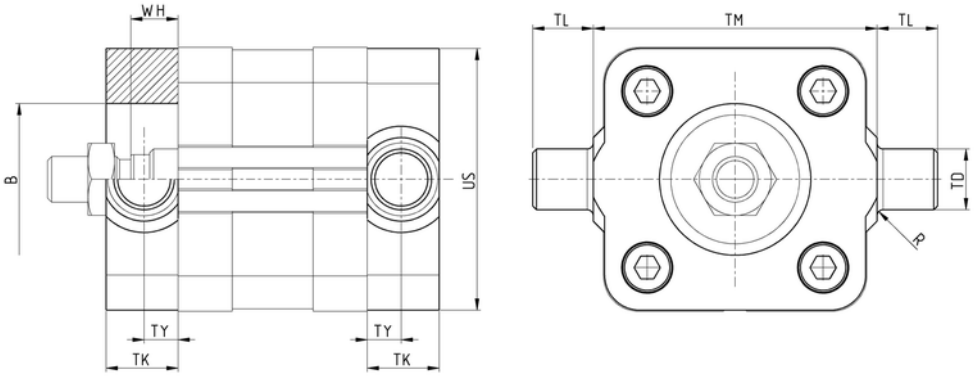

Mod.	Ø	TK	TY	WH	øB	US	TL	TM	øTD	R
FN-32	32	14	6,5	7	30	46	12	50	12	1
FN-40	40	19	9	7	35	59	16	63	16	1,5
FN-50	50	19	9	8	40	69	16	75	16	1,6
FN-63	63	24	11,5	8	45	84	20	90	20	1,6
FN-80	80	24	11,5	9,5	45	102	20	110	20	1,6
FN-100	100	29	14	9,7	55	125	25	132	25	2
FN-125	125	30	15	11	60	150	25	160	25	2

Products designed for industrial applications. General terms and conditions for sale are available on www.camozzi.com
This document contains a description of the products offered by Camozzi Automation at time of publication.
For more complete and up to date information about the Camozzi Automation product range, please refer to our online catalogue at https://shop.camozzi.com

Opposed cylinder coupler Mod. DC-32



Material:
Aluminium

Supplied with:
1x flange
2x hex head screws
2x cylindrical head screws
2x centering rings*

*Only from Ø50 to Ø125

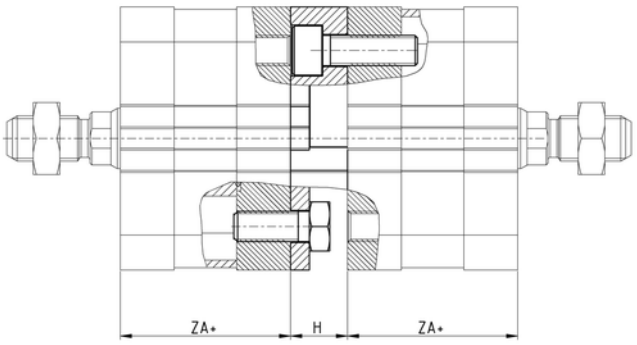

Mod.	Ø	ZA +	H
DC-32-20	20	36,8	13
DC-32-25	25	38,8	13
DC-32-32	32	44	15
DC-32-40	40	45	15
DC-32-50	50	45	15
DC-32-63	63	49	15
DC-32-80	80	54	17
DC-32-100	100	66,8	19,5
DC-32-125	125	81	19,5

90° swivel combination for trunnion Mod. I



Material:
zinc-plated steel

Supplied with:
2x Seeger
1x female support
1x piston pinr

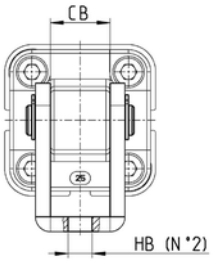

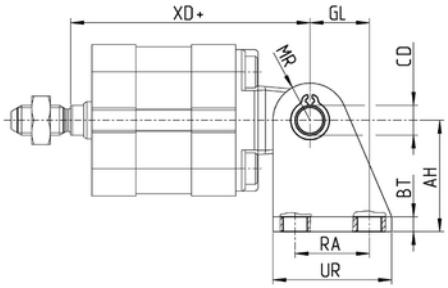

+ = add the stroke

Mod.	Ø	AH	BT	⌀CD	CB	GL	⌀HB	MR	RA	UR	XD+
I-12-16	16	27	3	6	12,1	13	5,5	7	15	25	55,7
I-20-25	20	30	4	8	16,1	16	6,5	10	20	32	62,5
I-20-25	25	30	4	8	16,1	16	6,5	10	20	32	64,5

Products designed for industrial applications. General terms and conditions for sale are available on www.camozzi.com
This document contains a description of the products offered by Camozzi Automation at time of publication.
For more complete and up to date information about the Camozzi Automation product range, please refer to our online catalogue at https://shop.camozzi.com

Clevis pin Mod. S



Materials:
Stainless steel Clevis pin,
Steel Seeger

Supplied with:
1x clevis pin
2x seeger in steel

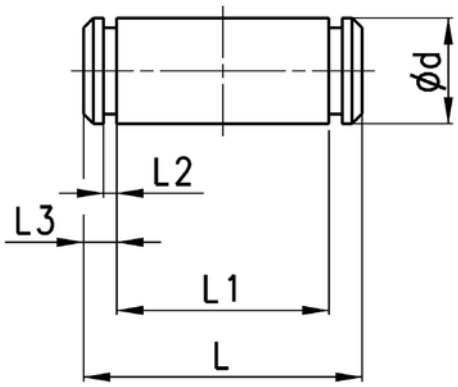

Mod.	Ø	øD	L	L1	L2	L3
S-32	32	10	52	46	1,1	3
S-40	40	12	59	53	1,1	3
S-50	50	12	67	61	1,1	3
S-63	63	16	77	71	1,1	3
S-80	80	16	97	91	1,1	3
S-100	100	20	121	111	1,3	5
S-125	125	25	140,5	132	1,3	4,25

Rod fork end Mod. G



ISO 8140

Material:
zinc-plated steel

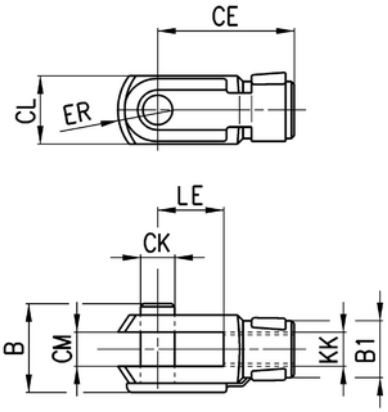

Mod.	Ø	øCK	LE	CM	CL	ER	CE	KK	B	øB1
G-12-16	16	6	6	6	12	7	24	M6X1	16	10
G-20	20-25	8	8	8	16	10	32	M8X1,25	22	14
G-25-32	32-40	10	10	10	20	12	40	M10X1,25	26	18
G-40	50-63	12	12	12	24	14	48	M12X1,25	32	20
G-50-63	80-100	16	16	16	32	19	64	M16X1,5	40	26
G-80-100	125	20	20	20	40	25	80	M20x1,5	48	34

Products designed for industrial applications. General terms and conditions for sale are available on www.camozzi.com
This document contains a description of the products offered by Camozzi Automation at time of publication.
For more complete and up to date information about the Camozzi Automation product range, please refer to our online catalogue at https://shop.camozzi.com

Swivel ball joint Mod. GA



ISO 8139

Material:
zinc-plated steel

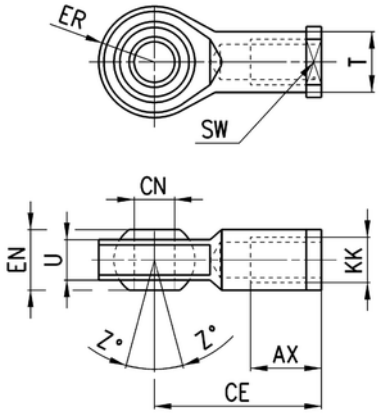

Mod.	Ø	øCN	U	EN	ER	AX	CE	KK	øT	Z	SW
GA-12-16	16	6	7	9	10	12	30	M6x1	10	6,5	11
GA-20	20 - 25	8	9	12	12	16	36	M8x1,25	12,5	6,5	14
GA-25-32	32 - 40	10	10,5	14	14	20	43	M10x1,25	15	6,5	17
GA-40	50 - 63	12	12	16	16	22	50	M12x1,25	17,5	6,5	19
GA-50-63	80 - 100	16	15	21	21	28	64	M16x1,5	22	7,5	22
GA-80-100	125	20	18	25	25	33	77	M20x1,5	27,5	7	30

Piston rod socket joint Mod. GY



ISO 8139

Material:
zama and zinc-plated steel

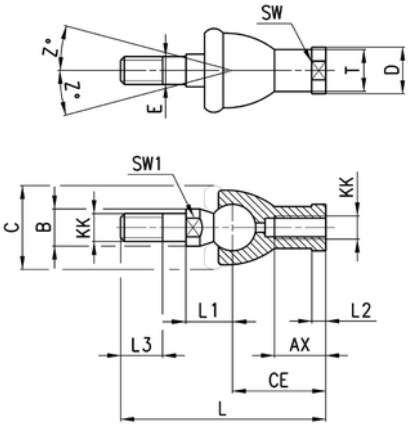

Mod.	Ø	KK	L	CE	L2	AX	SW	SW1	L1	L3	øT	øD	øE	øB	øC	Z
GY-12-16	16	M6x1	55	28	5	15	11	8	12,2	11	10	13	6	10	20	15
GY-20	20-25	M8x1,25	65	32	5	16	14	10	16	12	12,5	13	6	10	20	15
GY-32	32-40	M10x1,25	74	35	6,5	18	17	11	19,5	15	15	19	10	14	28	15
GY-40	50-63	M12x1,25	84	40	6,5	20	19	17	21	17	17,5	22	12	19	32	15
GY-50-63	80-100	M16x1,5	112	50	8	27	22	19	27,5	23	22	27	16	22	40	11
GY-80-100	125	M20x1,5	133	63	10	38	30	24	31,5	25	27,5	34	20	27	45	7,5

Products designed for industrial applications. General terms and conditions for sale are available on www.camozzi.com
This document contains a description of the products offered by Camozzi Automation at time of publication.
For more complete and up to date information about the Camozzi Automation product range, please refer to our online catalogue at https://shop.camozzi.com

Self aligning rod Mod. GK



Material:
zinc-plated steel

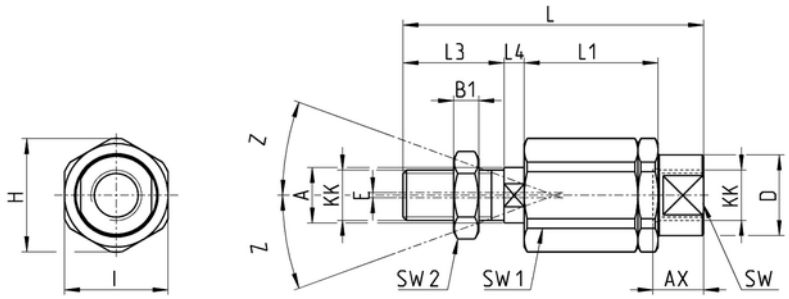

Mod.	Ø	KK	L	L1	L3	L4	øA	øD	H	I	SW	SW1	SW2	B1	AX	Z	E
GK-12-16	16	M6X1	35	17,5	11	2,5	6	8,5	14,5	13	7	5	10	4	12,5	3	1
GK-20	20-25	M8X1,25	57	26	21	5	8	12,5	19	17	11	7	13	4	16	4	2
GK-25-32	32-40	M10X1,25	71,5	35	20	7,5	14	22	32	30	19	12	17	5	22	4	2
GK-40	50-63	M12X1,25	75,5	35	24	7,5	14	22	32	30	19	12	19	6	22	4	2
GK-50-63	80-100	M16X1,5	104	35	32	10	22	32	45	41	27	20	24	8	30	3	2
GK-80-100	125	M20x1,5	119	35	40	10	22	32	45	41	27	20	30	10	37	3	2

Coupling piece Mod. GKF



Material:
zinc-plated steel

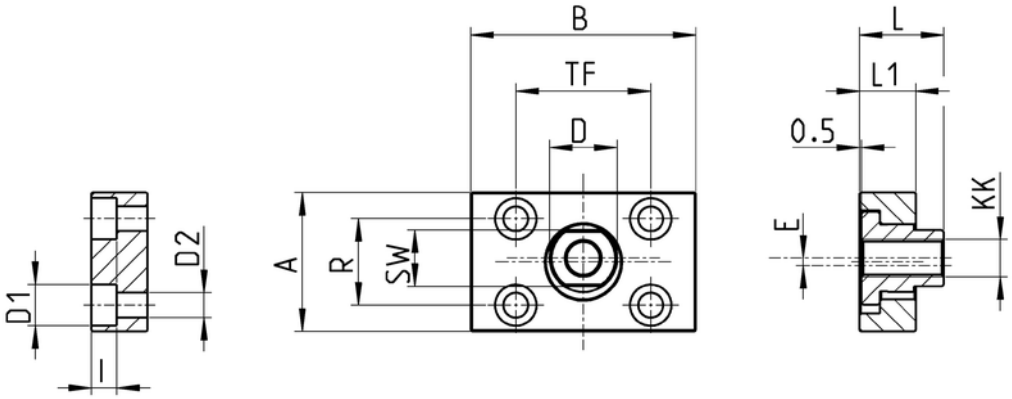

Mod.	Ø	KK	A	B	R	TF	L	L1	I	øD	øD1		SW	E
GKF-20	20-25	M8X1,25	30	35	20	25	22,5	10	-	14	5,5	-	13	1,5
GKF-25-32	32-40	M10X1,25	37	60	23	36	22,5	15	6,8	18	11	6,6	15	2
GKF-40	50-63	M12X1,25	56	60	38	42	22,5	15	9	20	15	9	15	2,5
GKF-50-63	80-100	M16X1,5	80	80	58	58	26,5	15	10,5	25	18	11	22	2,5
GKF-80-100	125	M20X1,5	90	90	65	65	32,5	20	13	30,5	20	14	27	2,5

Products designed for industrial applications. General terms and conditions for sale are available on www.camozzi.com
This document contains a description of the products offered by Camozzi Automation at time of publication.
For more complete and up to date information about the Camozzi Automation product range, please refer to our online catalogue at https://shop.camozzi.com

Piston rod nut Mod. U



UNI EN ISO 4035

Material:
zinc-plated steel

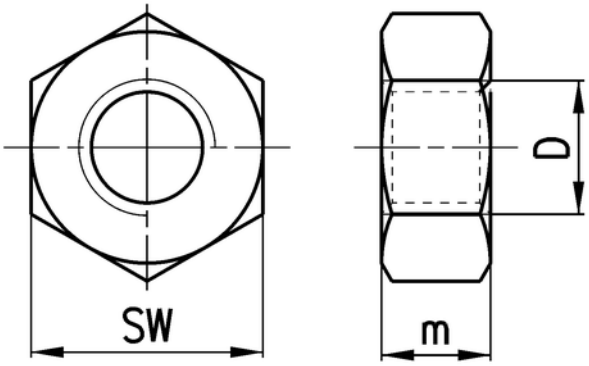

Mod.	Ø	D	M	SW
U-12-M5	12	M5x0,8	5	8
U-12-16	16	M6x1	4	10
U-20	20-25	M8x1,25	5	13
U-25-32	32-40	M10x1,25	6	17
U-40	50-63	M12x1,25	7	19
U-50-63	80-100	M16x1,5	8	24
U-80-100	125	M20x1,5	9	30

Centring sleeve



Supplied with:
1x anodized AL centring ring

Designed for the centring of both rear and front end caps with brackets Mod. B/D-E/C/C-H/H/L/R, as for the centring of the cylinder while mounting.

Not suitable for 32CM and 32CF versions.

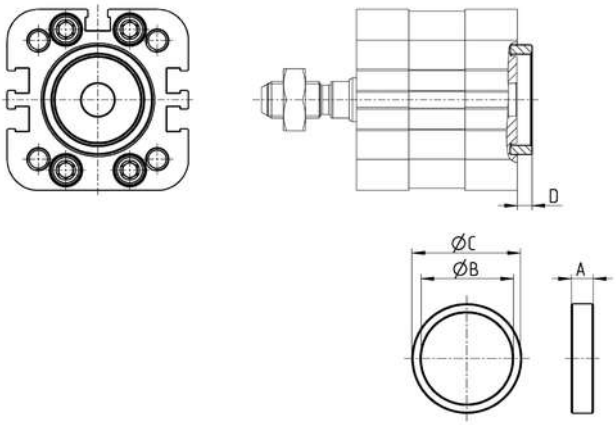

Mod.	Ø	A	øB	øC	D
TR-32-32	32	6	25	30	4
TR-32-40	40	6	30	35	4
TR-32-50	50	6	35	40	4
TR-32-63	63-80	7	40	45	5
TR-32-100	100	7	50	55	5

Products designed for industrial applications. General terms and conditions for sale are available on www.camozzi.com
This document contains a description of the products offered by Camozzi Automation at time of publication.
For more complete and up to date information about the Camozzi Automation product range, please refer to our online catalogue at https://shop.camozzi.com

Centring pin Mod. TS



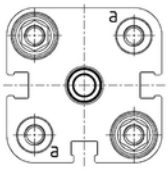

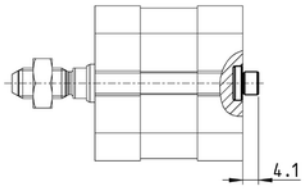

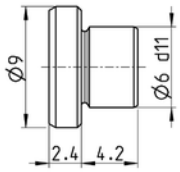

Material:
Anodized AL

Usable for size 12, 16, 20, 25, 32, 40

Mod.
TS-32-20

Magnetic proximity switches, ATEX "II 3 GD" certified, T-slot, straight



Top mounting with the new fixing system

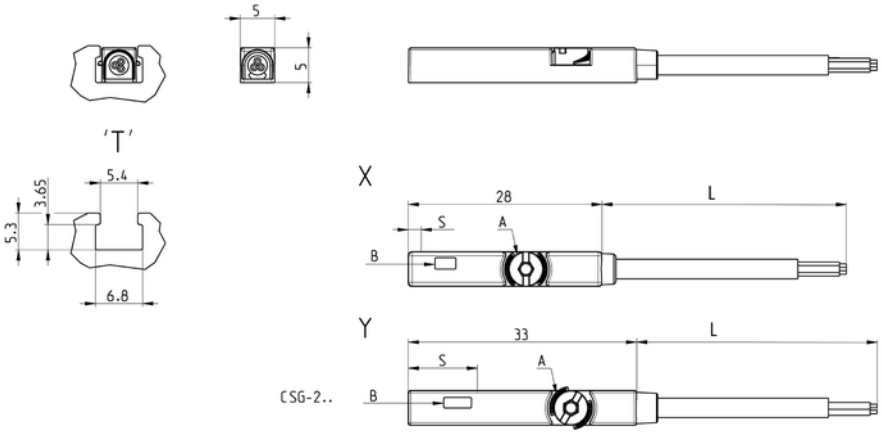

Mod.	Operation	Connection	Voltage	Output	Max. current	Max Load	Protection	L	S	LED colour
CSG-223-2-EX*	Reed NO	2 wires	5 ÷ 30 V AC/DC	-	100 mA	3 W	IP67	2 m	10 mm	Red
CSG-223-5-EX*	Reed NO	2 wires	5 ÷ 30 V AC/DC	-	100 mA	3 W	IP67	5 m	10 mm	Red
CSG-233-2-EX	Reed NO	3 wires	10 ÷ 30 V AC/DC	PNP	500 mA	10 W	IP67	2 m	10 mm	Yellow
CSG-233-5-EX	Reed NO	3 wires	10 ÷ 30 V AC/DC	PNP	500 mA	10 W	IP67	5 m	10 mm	Yellow
CSG-324-2-EX*	Magnetoresistive NO	2 wires	10 ÷ 28 V DC	-	50 mA	1,5 W	IP67	2 m	2,3 mm	Red
CSG-324-5-EX*	Magnetoresistive NO	2 wires	10 ÷ 28 V DC	-	50 mA	1,5 W	IP67	5 m	2,3 mm	Red
CSG-334-2-EX	Magnetoresistive NO	3 wires	10 ÷ 28 V DC	PNP	200 mA	5,5 W	IP67	2 m	2,3 mm	Yellow
CSG-334-5-EX	Magnetoresistive NO	3 wires	10 ÷ 28 V DC	PNP	200 mA	5,5 W	IP67	5 m	2,3 mm	Yellow
CSG-534-2-EX	Magnetoresistive NO	3 wires	10 ÷ 28 V DC	NPN	200 mA	5,5 W	IP67	2 m	2,3 mm	Red
CSG-534-5-EX	Magnetoresistive NO	3 wires	10 ÷ 28 V DC	NPN	200 mA	5,5 W	IP67	5 m	2,3 mm	Red
CSG-734-2-EX	Magnetoresistive NC	3 wires	10 ÷ 28 V DC	NPN	200 mA	5,5 W	IP67	2 m	2,3 mm	Red
CSG-734-5-EX	Magnetoresistive NC	3 wires	10 ÷ 28 V DC	NPN	200 mA	5,5 W	IP67	5 m	2,3 mm	Red
CSG-634-2-EX	Magnetoresistive NC	3 wires	10 ÷ 28 V DC	PNP	200 mA	5,5 W	IP67	2 m	2,3 mm	Yellow
CSG-634-5-EX	Magnetoresistive NC	3 wires	10 ÷ 28 V DC	PNP	200 mA	5,5 W	IP67	5 m	2,3 mm	Yellow

Products designed for industrial applications. General terms and conditions for sale are available on www.camozzi.com
This document contains a description of the products offered by Camozzi Automation at time of publication.
For more complete and up to date information about the Camozzi Automation product range, please refer to our online catalogue at https://shop.camozzi.com

Magnetic proximity switches, UL certified, T-slot, straight



Top mounting with the new fixing system

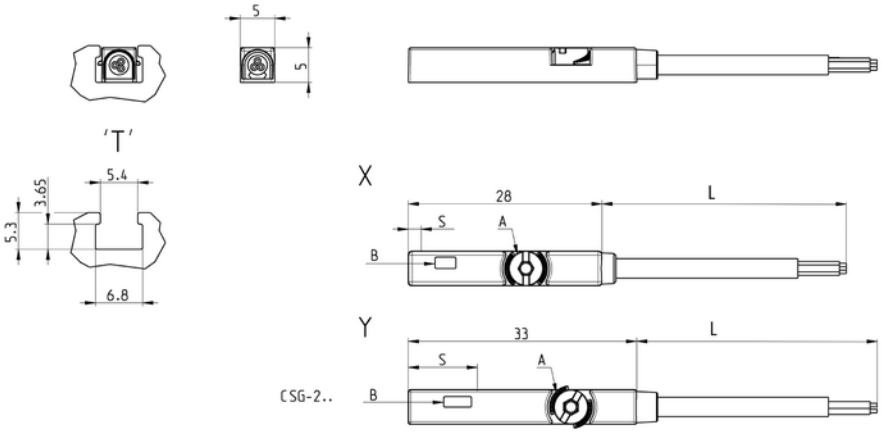

Mod.	Operation	Connection	Voltage	Output	Max. current	Max Load	Protection	L	S	LED colour
CSG-223-2-UL*	Reed	2 wires	5 ÷ 30 V AC/DC	-	60 mA	1,8 W	IP67	2 m	10 mm	Red
CSG-223-5-UL*	Reed	2 wires	5 ÷ 30 V AC/DC	-	60 mA	1,8 W	IP67	5 m	10 mm	Red
CSG-223-10-UL	Reed	2 wires	5 ÷ 30 V AC/DC	-	60 mA	1,8 W	IP67	10 m	10 mm	Red
CSG-233-2-UL	Reed	3 wires	10 ÷ 30 V AC/DC	PNP	100 mA	3 W	IP67	2 m	10 mm	Yellow
CSG-233-5-UL	Reed	3 wires	10 ÷ 30 V AC/DC	PNP	100 mA	3 W	IP67	5 m	10 mm	Yellow
CSG-233-10-UL	Reed	3 wires	10 ÷ 30 V AC/DC	PNP	100 mA	3 W	IP67	5 m	10 mm	Yellow
CSG-324-2-UL*	Magnetoresistive	2 wires	10 ÷ 28 V DC	-	40 mA	1,2 W	IP67	2 m	2,3 mm	Red
CSG-324-5-UL*	Magnetoresistive	2 wires	10 ÷ 28 V DC	-	40 mA	1,2 W	IP67	5 m	2,3 mm	Red
CSG-334-2-UL	Magnetoresistive	3 wires	10 ÷ 28 V DC	PNP	100 mA	3 W	IP67	2 m	2,3 mm	Yellow
CSG-334-5-UL	Magnetoresistive	3 wires	10 ÷ 28 V DC	PNP	100 mA	3 W	IP67	5 m	2,3 mm	Yellow
CSG-534-2-UL	Magnetoresistive	3 wires	10 ÷ 28 V DC	NPN	100 mA	3 W	IP67	2 m	2,3 mm	Red
CSG-534-5-UL	Magnetoresistive	3 wires	10 ÷ 28 V DC	NPN	100 mA	3 W	IP67	5 m	2,3 mm	Red

Products designed for industrial applications. General terms and conditions for sale are available on www.camozzi.com
This document contains a description of the products offered by Camozzi Automation at time of publication.
For more complete and up to date information about the Camozzi Automation product range, please refer to our online catalogue at https://shop.camozzi.com

Magnetic proximity switches with 2 or 3 wire cable for T-slot



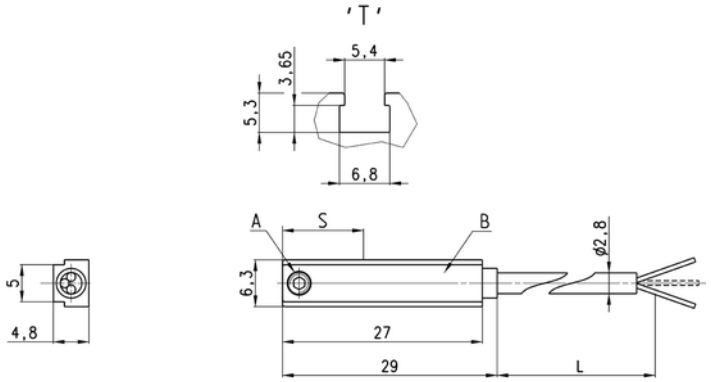

Mod.	Operation	Connections	Voltage	Output	Max. current	Max Load	Protection	L	S	LED colour
CST-220*	Reed	2 wires	10 ÷ 110 V AC/DC-230 V AC	-	250 mA	10 VA / 8W	None	2 m	14,5 mm	Yellow
CST-220-5*	Reed	2 wires	10 ÷ 110 V AC/DC-230 V AC	-	250 mA	10 VA / 8 W	None	5 m	14,5 mm	Yellow
CST-220EX	Reed	2 wires	10 ÷ 110 V AC/DC-230 V AC	-	250 mA	10 VA / 8W	None	2 m	14,5 mm	Yellow
CST-220-5EX	Reed	2 wires	10 ÷ 110 V AC/DC-230 V AC	-	250 mA	10 VA / 8W	None	5 m	14,5 mm	Yellow
CST-220-12EX	Reed	2 wires	10 ÷ 110 V AC/DC-230 V AC	-	250 mA	10 VA / 8W	None	12 m	14,5 mm	Yellow
CST-232	Reed	3 wires	5 ÷ 30 V AC/DC	PNP	250 mA	10 VA / 8 W	Against polarity reversing	2 m	14,5 mm	Yellow
CST-232-5	Reed	3 wires	5 ÷ 30 V AC/DC	PNP	250 mA	10 VA / 8 W	Against polarity reversing	5 m	14,5 mm	Yellow
CST-232EX	Reed	3 wires	5 ÷ 30 V AC/DC	PNP	250 mA	10 VA / 8W	Against polarity reversing	2 m	14,5 mm	Yellow
CST-232-5EX	Reed	3 wires	5 ÷ 30 V AC/DC	PNP	250 mA	10 VA / 8W	Against polarity reversing and overvoltage	5 m	14,5 mm	Yellow
CST-332	Magnetoresistive	3 wires	10 ÷ 27 V DC	PNP	100 mA	6 W	Against polarity reversing and overvoltage	2 m	7,5 mm	Yellow
CST-332-5	Magnetoresistive	3 wires	10 ÷ 27 V DC	PNP	100 mA	6 W	Against polarity reversing and overvoltage	5 m	7,5 mm	Yellow
CST-332EX	Magnetoresistive	3 wires	10 ÷ 27 V DC	PNP	100 mA	6 W	Against polarity reversing and overvoltage	2 m	7,5 mm	Yellow
CST-332-5EX	Magnetoresistive	3 wires	10 ÷ 27 V DC	PNP	100 mA	6 W	Against polarity reversing and overvoltage	5 m	7,5 mm	Yellow
CST-432	Reed	3 wires	5 ÷ 30 V AC/DC	PNP-NC	250 mA	10 VA / 8 W	Against polarity reversing	2 m	14,5 mm	Yellow
CST-432-5	Reed	3 wires	5 ÷ 30 V AC/DC	PNP-NC	250 mA	10 VA / 8 W	Against polarity reversing	5 m	14,5 mm	Yellow
CST-432EX	Reed	3 wires	5 ÷ 30 V AC/DC	PNP-NC	250 mA	10 VA / 8 W	Against polarity reversing	2 m	14,5 mm	Yellow
CST-432-5EX	Reed	3 wires	5 ÷ 30 V AC/DC	PNP-NC	250 mA	10 VA / 8 W	Against polarity reversing	5 m	14,5 mm	Yellow
CST-532	Hall effect	3 wires	10 ÷ 27 V DC	PNP	100 mA	6 W	Against polarity reversing and overvoltage	2 m	8,5 mm	Yellow
CST-532-5	Hall effect	3 wires	10 ÷ 27 V DC	PNP	100 mA	6 W	Against polarity reversing and overvoltage	5 m	8,5 mm	Yellow
CST-532EX	Hall effect	3 wires	10 ÷ 27 V DC	PNP	100 mA	6 W	Against polarity reversing and overvoltage	2 m	8,5 mm	Yellow
CST-532-5EX	Hall effect	3 wires	10 ÷ 27 V DC	PNP	100 mA	6 W	Against polarity reversing and overvoltage	5 m	8,5 mm	Yellow

Magnetic proximity switches with M8 3-pin connector for T-slot



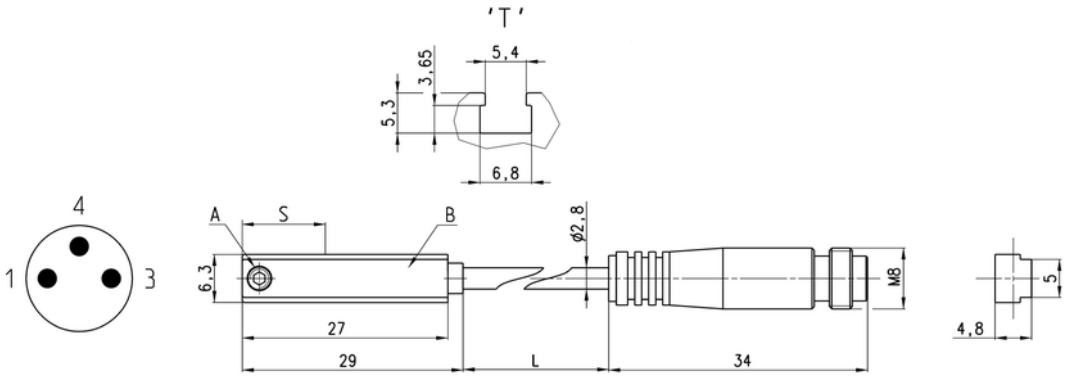

Mod.	Operation	Connection	Voltage	Output	Max. current	Max Load	Protection	L	S	LED colour
CST-250N*	Reed	2 wires M8 male 3 pin	10 ÷ 110 V AC/DC	-	250 mA	10 VA / 8 W	None	0,3 m	14,5 mm	Yellow
CST-250NEX	Reed	2 wires M8 male 3 pin	10 ÷ 110 V AC/DC	-	250 mA	10 VA / 8 W	None	0,3 m	14,5 mm	Yellow
CST-262	Reed	3 wires M8 male 3 pin	5 ÷ 30 V AC/DC	PNP	250 mA	10 VA / 8 W	Against polarity reversing	0,3 m	14,5 mm	Yellow
CST-262EX	Reed	3 wires M8 male 3 pin	5 ÷ 30 V AC/DC	PNP	250 mA	10 VA / 8 W	Against polarity reversing	0,3 m	14,5 mm	Yellow
CST-362	Magnetoresistive	3 wires M8 male 3 pin	10 ÷ 27 V DC	PNP	100 mA	6 W	Against polarity reversing and overvoltage	0,3 m	7,5 mm	Yellow
CST-362EX	Magnetoresistive	3 wires M8 male 3 pin	10 ÷ 27 V DC	PNP	100 mA	6 W	Against polarity reversing and overvoltage	0,3 m	7,5 mm	Yellow
CST-562	Hall effect	3 wires M8 male 3 pin	10 ÷ 27 V DC	PNP	100 mA	6 W	Against polarity reversing and overvoltage	0,3 m	8,5 mm	Yellow
CST-562EX	Hall effect	3 wiresM8 male 3 pin	10 ÷ 27 V DC	PNP	100 mA	6 W	Against polarity reversing and overvoltage	0,3 m	8,5 mm	Yellow

Products designed for industrial applications. General terms and conditions for sale are available on www.camozzi.com
This document contains a description of the products offered by Camozzi Automation at time of publication.
For more complete and up to date information about the Camozzi Automation product range, please refer to our online catalogue at https://shop.camozzi.com