MURR ELEKTRONIK
stay connected

MVK Pro MPNIO DIO8 IOL8 M12L 4P

PROFINET, compact module, metal

Digital inputs/outputs
Ethernet 10/100 Mbit/s; M12, D-coded
IO-Link Master V1.1
M12 Power, 4-pole, L-coded
M12, 5-pole, A-coded
Housing fully potted.
Connection cables are in the online shop under "Connection Technology".
mounting compatible with I/O modules of the MVK series

Link to Product

Illustration



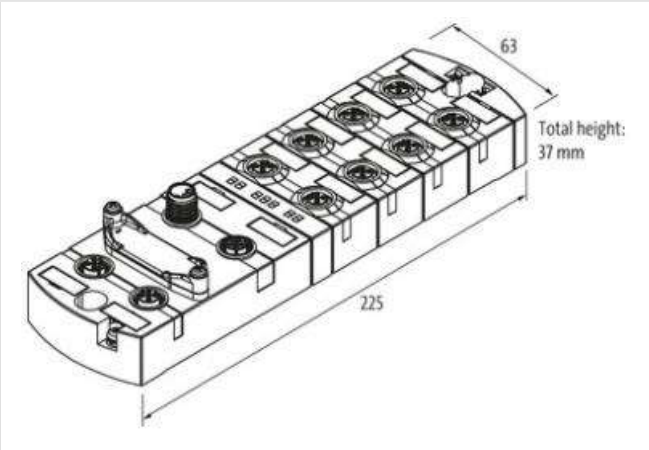

Product may differ from Image

Commercial data

ECLASS-6.0	27242604
ECLASS-6.1	27242604
ECLASS-7.0	27242604
ECLASS-8.0	27242604
ECLASS-9.0	27242604
ECLASS-10.1	27242604
ECLASS-11.1	27242604
ECLASS-12.0	27242604
ETIM-5.0	EC001597
customs tariff number	85389099
GTIN	4048879859530
Packaging unit	1

Electrical data | Supply

Norm operating voltage	EN 61131-2
Operating voltage US DC	24 V
Operating voltage UA DC	24 V
Total current UA max.	16 A

The information in this Product-PDF has been compiled with the utmost care.
Liability for the correctness completeness and topicality of the information is restricted to gross negligence. Version: 2024-02-02

MURR ELEKTRONIK
stay connected

Total current US max.	16 A
Electrical data | Input	
Overload resistant	yes
Short-circuit protected	yes
Type input	PNP, for 3-wire sensors or mechanical switches, IO-Link Devices
Sensor current US per input max.	2 A
Current carrying capacity max.	10 A
Electrical data | Output	
Actuator current UA per output max.	2 A
Overload resistant	yes
Short-circuit protected	yes
Output current per pin max.	2 A
Max. current output per port	4 A
Total current output max.	10 A
Industrial communication	
Supported protocol	PROFINET
Web interface	yes
Industrial communication | Profinet	
Number of active connections (IO controller) max.	2
IRT (network communication)	yes
PROFINET Netload Class	III
PROFINET addressing	DCP
PROFINET conformance class	C
PROFINET specification	V2.3
Shared device/input	yes
Industrial communication | IO-Link	
Automatic baudrate detection	yes
IO-Link process data length output	32 Bytes
IO-Link process data length input	32 Bytes
IO-Link revision ID	V1.1
IO-Link type	8× Master
IO-Link transmission rate	COM1, COM2, COM3
Port Class	A, B
Industrial communication | IIoT functions	
Number of sessions / clients OPC UA max.	5
JSON integration	REST-API, MQTT
OPC UA transport	UA TCP, UA Secure Conversation, UA Binary Encoding
Voltage monitoring	yes
Current Monitoring	yes
Publishing interval OPC UA min.	100 ms
Diagnostics	
Actuator warning	per channel via LED and BUS
Diagnostic via BUS	per module and channel
Diagnostic via LED	per module and channel
IO-Link events	No voltage, Undervoltage supply
Short circuit diagnosis	yes
LED display	Ethernet connection/data traffic
Cable break	per port
Temperature control	yes
Overload diagnosis	yes

The information in this Product-PDF has been compiled with the utmost care.
Liability for the correctness completeness and topicality of the information is restricted to gross negligence. Version: 2024-02-02

MURR ELEKTRONIK
stay connected

Device protection | Electrical	
Degree of protection (EN IEC 60529)	IP67
Mechanical data | Mounting data	
Suitable for mounting type	2-hole screw mounting
Height	42 mm
Width	63 mm
Depth	225 mm
Environmental characteristics | Climatic	
Operating temperature min.	-25 °C
Operating temperature max.	70 °C
Storage temperature min.	-40 °C
Storage temperature max.	80 °C
Connection type 4	
Connection type 1	X0-X7
Connection type 2	XD1
Connection type 3	XD2
Connection type 4	XF1, XF2
Family construction form	M12
Gender	female
Color contact carrier	gray
Coding	A
No. of poles	5
PIN 1	24 V DC
PIN 2	DI / DO
PIN 3	0 V
PIN 4	DI / DO / IO-Link
PIN 5	0 V
Family construction form	M12
Gender	male
Color contact carrier	black
Coding	L
No. of poles	5
PIN 1	24 V DC (US)
PIN 2	0 V
PIN 3	0 V
PIN 4	24 V DC (UA)
PIN 5	n.c.
Family construction form	M12
Gender	female
Color contact carrier	black
Coding	L
No. of poles	4
PIN 1	24 V DC (US)
PIN 2	0 V
PIN 3	0 V
PIN 4	24 V DC (UA)
Family construction form	M12
Gender	female
Color contact carrier	green
Coding	D
No. of poles	4
PIN 1	TD +
PIN 2	RD +

The information in this Product-PDF has been compiled with the utmost care.
Liability for the correctness completeness and topicality of the information is restricted to gross negligence. Version: 2024-02-02

PIN 3	TD -
PIN 4	RD -

The information in this Product-PDF has been compiled with the utmost care.
Liability for the correctness completeness and topicality of the information is restricted to gross negligence. Version: 2024-02-02