TI01796F/00/EN/04.25-00
71726356
2025-09-30

Technical Information
Micropilot FMR20B

Free-space radar
HART



Level measurement in liquids and bulk solids

Application

- Continuous, non-contact level measurement of liquids and bulk solids
- Degree of protection: IP66/68 / NEMA Type 4X/6P
- Maximum measuring range up to 30 m (98 ft)
- Process temperature: −40 to 80 °C (−40 to 176 °F)
- Process pressure: −1 to 3 bar (−14 to 43 psi)
- Accuracy: Up to ± 2 mm (0.08 in)
- International explosion protection certificates

Your benefits

- LED indicator for fast status detection
- Easy, guided commissioning with intuitive user interface
- Radar measuring device with *Bluetooth*® wireless technology and HART communication
- Easy, reliable and encrypted wireless remote access – ideal for difficult-to-reach installations, even in hazardous areas
- Commissioning, operation and maintenance via free iOS/Android app SmartBlue – saves time and reduces costs
- Flow measurement in open channels or weirs with totalizer

Endress+Hauser
People for Process Automation

Table of contents

About this document 4
Symbols 4
List of abbreviations 4
Graphic conventions 5

Function and system design 5
Measuring principle 5
Measuring system 6
Communication and data processing 6
Dependability 6

Input 6
Measured variable 6
Measuring range 6
Operating frequency 10
Transmission power 11

Output 11
Output signal 11
Signal on alarm for devices with current output 11
Load 11
Damping 11
Ex connection data 11
Linearization 11
Totalizer 12
Protocol-specific data 12
Wireless HART data 13

Power supply 13
Cable assignment 13
Supply voltage 13
Power consumption 14
Potential equalization 14
Connecting the device 14
Cable specification 16
Overvoltage protection 16

Performance characteristics 16
Reference operating conditions 16
Response time 16
Resolution 17
Maximum measurement error 17
Influence of ambient temperature 18
Reaction time 18
Warm-up time 18

Installation 19
Installation types 19
Mounting location 20
Orientation 20
Installation instructions 20
Beam angle 21
Special installation instructions 22
Weather protection cover 22
Flooding protection tube 23
Installation with mounting bracket, adjustable 23
Cantilever installation, with pivot 24
Mounting with a pivotable mounting bracket 25

Environment 25
Ambient temperature range 25
Storage temperature 25
Climate class 25
Operating height 25
Degree of protection 26
Vibration resistance 26
Electromagnetic compatibility (EMC) 26

Process 27
Process temperature, process pressure 27
Relative permittivity 27

Mechanical construction 28
Dimensions 28
Weight 30
Materials 31
Connecting cable 31

Operability 31
Operating concept 31
LED indicator 32
Remote operation 32
Supported operating tools 32

Certificates and approvals 33
Radio standard EN 302729 33
FCC 34
Industry Canada 34
Pressure equipment with permitted pressure less than 200 bar, no pressure-bearing volume 34

Ordering information 35
Tagging 35
Factory verification certificate 35
Service 35

Application packages 36
Heartbeat Technology 36

Accessories 36
Weather protective cover for device with cable entry from above 36
Weather protective cover for device with cable entry at side 37
Securing nut G 1½" 37
Securing nut G 2" 37
Uni adapter G 1½">G 2" 38
Uni adapter MNPT 1½" > MNPT 2" 38
Flooding protection tube 40 mm (1.5 in) 39
Flooding protection tube 80 mm (3 in) 39
Mounting bracket, adjustable, wall/rope/ceiling, 75 mm . . 40
Mounting bracket, adjustable, wall, 200 mm 41
Angle bracket for wall mounting 42

Cantilever with pivot 43
Pivotable mounting bracket 48
FAU40 alignment unit 48
UNI slip-on flange 3"/DN80/80, PP 50
UNI slip-on flange 4"/DN100/100, PP 51
UNI slip-on flange 6"/DN150/150, PP 52
UNI flange 2"/DN50/50, PP 53
UNI flange 3"/DN80/80, PP 54
UNI flange 4"/DN100/100, PP 55
Adjustable flange seal 56
RIA15 in the field housing 57
HART communication resistor 57
DeviceCare SFE100 58
FieldCare SFE500 58
Device Viewer 58
Commubox FXA195 HART 58
RN22 58
RN42 58
Field Xpert SMT70 58
Field Xpert SMT77 58
SmartBlue app 59
RMA42 59

Documentation 59
Standard documentation 59
Supplementary device-dependent documentation 59

Registered trademarks 59

About this document

Symbols

Safety symbols

DANGER
This symbol alerts you to a dangerous situation. Failure to avoid this situation will result in serious or fatal injury.

WARNING
This symbol alerts you to a potentially dangerous situation. Failure to avoid this situation can result in serious or fatal injury.

CAUTION
This symbol alerts you to a potentially dangerous situation. Failure to avoid this situation can result in minor or medium injury.

NOTICE
This symbol alerts you to a potentially harmful situation. Failure to avoid this situation can result in damage to the product or something in its vicinity.

Communication-specific symbols

Bluetooth®:
Wireless data transmission between devices over a short distance via radio technology.

Symbols for certain types of information

Permitted:

Procedures, processes or actions that are permitted.

Forbidden:

Procedures, processes or actions that are forbidden.

Additional information:

Reference to documentation:

Reference to page:

Series of steps: 1., 2., 3.

Result of an individual step:

Symbols in graphics

Item numbers: 1, 2, 3 ...

Series of steps: 1., 2., 3.

Views: A, B, C, ...

List of abbreviations

PN
Nominal pressure

MWP
Maximum working pressure
The maximum working pressure is indicated on the nameplate.

ToF
Time of Flight

DTM
Device Type Manager

ε_r (Dk value)
Relative dielectric constant

Operating tool

The term "operating tool" is used in place of the following operating software:
- FieldCare / DeviceCare, for operation via HART communication, IO-Link communication and PC
- SmartBlue app for operation using an Android or iOS smartphone or tablet

PLC
Programmable logic controller (PLC)

Graphic conventions

- Installation, explosion and electrical connection drawings are presented in simplified format
- Devices, assemblies, components and dimensional drawings are presented in reduced-line format
- Dimensional drawings are not to-scale representations; the dimensions indicated are rounded off to 2 decimal places
- Unless otherwise described, flanges are presented with sealing surface form EN 1092-1; ASME B16.5, RF.

Function and system design

Measuring principle

The Micropilot is a "downward-looking" measuring system, operating based on the frequency modulated continuous wave method (FMCW). The antenna emits an electromagnetic wave at a continuously varying frequency. This wave is reflected by the product and received again by the antenna.

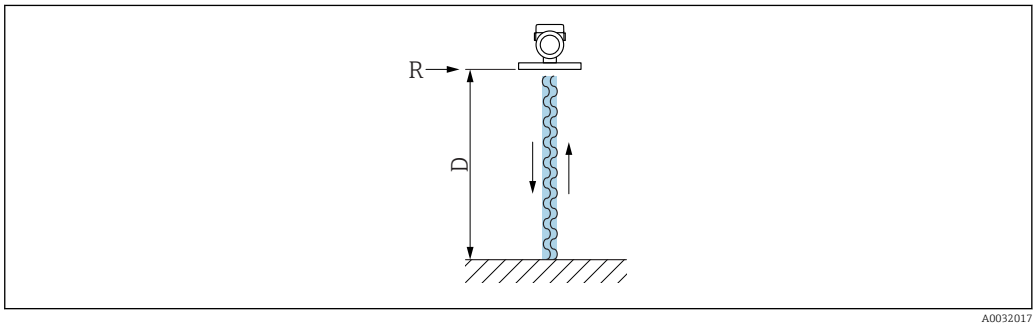

1 *FMCW principle: Transmission and reflection of the continuous wave*

R Reference point of measurement
D Distance between reference point and product surface

The frequency of this wave is modulated in the form of a sawtooth signal between two limit frequencies f_1 and f_2:

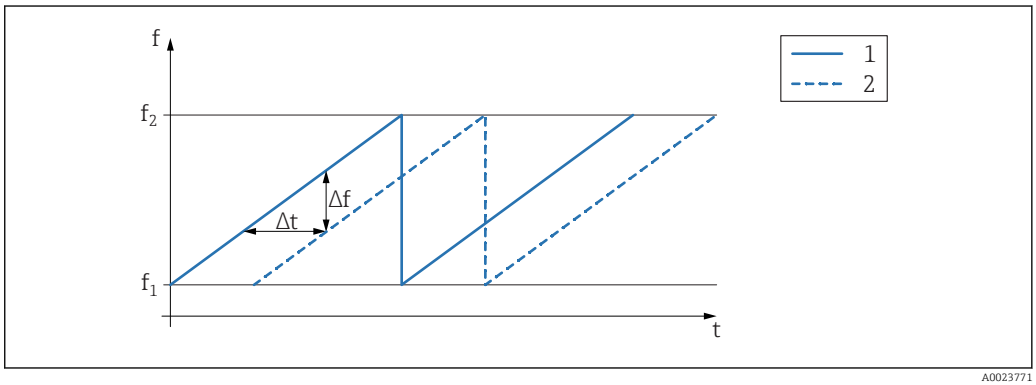

2 *FMCW principle: Result of frequency modulation*

1 Transmitted signal
2 Received signal

This results in the following difference frequency at any time between the transmitted signal and the received signal:

$\Delta f = k \Delta t$

where Δt is the run time and k is the specified increase in frequency modulation.

Δt is given by the distance D between the reference point R and the product surface:

$D = (c \Delta t) / 2$

where c is the wave velocity.

In summary, D can be calculated from the measured difference frequency Δf. D is then used to determine the fill level or flow rate.

Measuring system

A complete measuring system comprises:

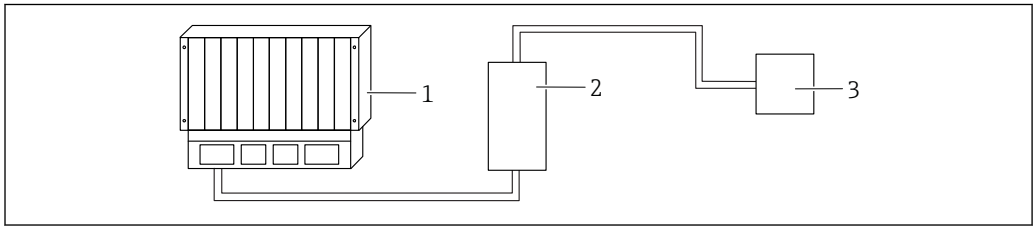

1 PLC (programmable logic controller)
2 RMA42/RIA45 (if necessary)
3 Device

Communication and data processing

- 4 to 20 mA with superimposed digital communication protocol HART, 2-wire
- Bluetooth® wireless technology (optional)

Dependability

IT security

The manufacturer warranty is valid only if the product is installed and used as described in the Operating Instructions. The product is equipped with security mechanisms to protect it against any inadvertent changes to the settings.

IT security measures, which provide additional protection for the product and associated data transfer, must be implemented by the operators themselves in line with their security standards.

Device-specific IT security

The device offers specific functions to support protective measures by the operator. These functions can be configured by the user and guarantee greater in-operation safety if used correctly. The user role can be changed with an access code (applies to operation via Bluetooth® wireless technology or FieldCare, DeviceCare, Asset Management Tools (e.g. AMS, PDM)).

Access via Bluetooth® wireless technology

Secure signal transmission via Bluetooth® wireless technology uses an encryption method tested by the Fraunhofer Institute.

- Without the SmartBlue app, the device is not visible via Bluetooth® wireless technology.
- Only one point-to-point connection is established between the device and a smartphone or tablet.
- The Bluetooth® interface can be disabled via SmartBlue or an operating tool via digital communication.

Input

Measured variable

The measured variable is the distance between the reference point and the product surface.

The level is calculated based on **E**, the empty distance entered.

Measuring range

The measuring range starts at the point where the beam hits the tank floor. Levels below this point cannot be measured, particularly in the case of spherical bases or conical outlets.

Maximum measuring range

The maximum measuring range depends on the antenna size.

Antenna	Maximum measuring range
40 mm (1.5 in)	20 m (65.6 ft)
80 mm (3 in)	30 m (98.4 ft)

Usable measuring range

The usable measuring range depends on the antenna size, the medium's reflective properties, the installation position and any possible interference reflections.

In principle, measurement is possible up to the tip of the antenna.

Depending on the position of the product (angle of repose for solids) and to avoid any material damage from corrosive or aggressive media or deposit buildup on the antenna, the end of the measuring range should be selected 10 mm (0.4 in) before the tip of the antenna.

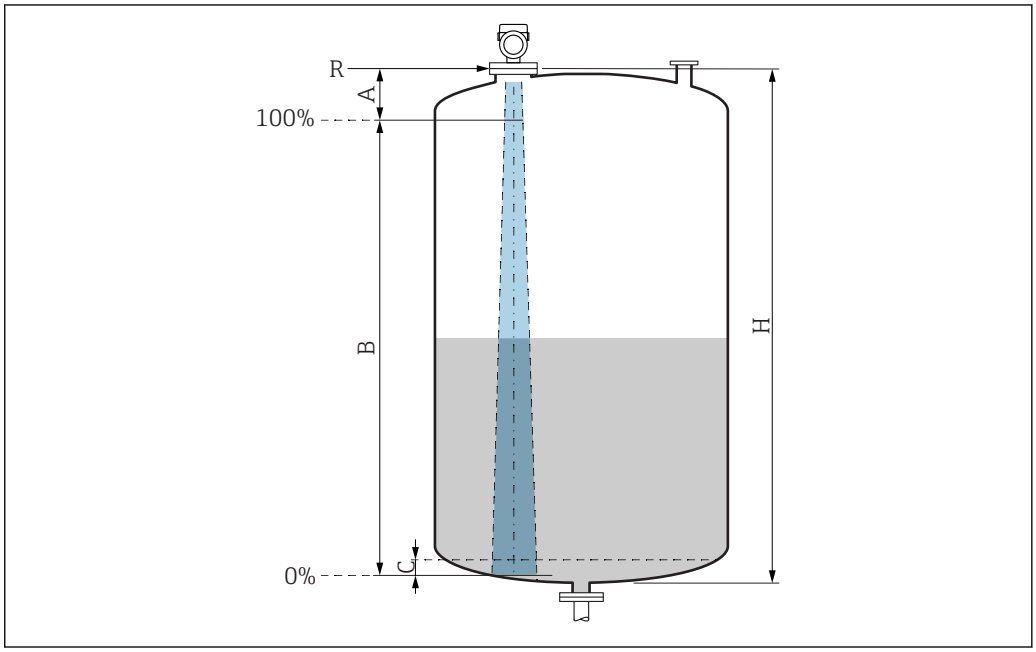

A Antenna tip + 10 mm (0.4 in)
B Usable measuring range
C 50 to 80 mm (1.97 to 3.15 in); Medium ε_r ≤2
H Vessel height
R Reference point of the measurement, varies depending on the antenna system (see section on Mechanical construction)

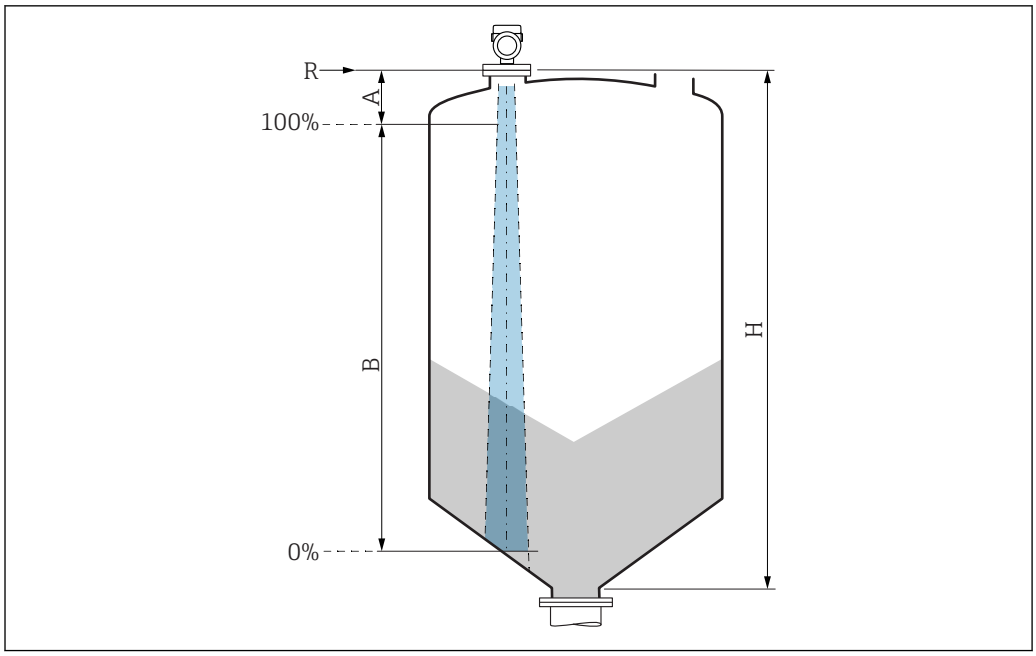

A Antenna tip + 10 mm (0.4 in)
B Usable measuring range
H Vessel height
R Reference point of the measurement, varies depending on the antenna system (see section on Mechanical construction)

In the case of media with a low dielectric constant ε_r <2, the tank bottom may be visible through the medium when levels are very low (less than level C). Reduced accuracy must be expected in this range. If this is not acceptable, the zero point should be positioned at a distance C above the tank bottom for these applications (see figure).

The media groups and the possible measuring range are described as a function of the application and media group in the following section. If the relative permittivity of the medium is not known, to ensure a reliable measurement assume the medium belongs to group B.

Media groups
- **A** (ε_r 1.4 to 1.9)
  Non-conductive liquids, e.g. liquefied gas
- **B** (ε_r 1.9 to 4)
  Non-conductive liquids, e.g. gasoline, oil, toluene, etc.
- **C** (ε_r 4 to 10)
  e.g. concentrated acid, organic solvents, ester, aniline, etc.
- **D** (ε_r >10)
  Conductive liquids, aqueous solutions, diluted acids, bases and alcohol

For the relative permittivity values (ε_r values) of many media commonly used in industry, please refer to:
- Relative permittivity (ε_r value), Compendium CP01076F
- The Endress+Hauser "DC Values app" (available for Android and iOS)

Measurement in storage vessel

Storage vessel - measuring conditions
Calm medium surface (e.g. bottom filling, filling via immersion tube or rare filling from above)

40 mm (1.5 in) antenna in storage vessel

	Media group	Measuring range
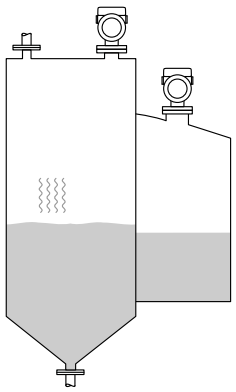	**A** (ε_r 1.4 to 1.9)	10 m (33 ft)
	B (ε_r 1.9 to 4)	20 m (65.6 ft)
	C (ε_r 4 to 10)	20 m (65.6 ft)
	D (ε_r >10)	20 m (65.6 ft)

80 mm (3 in) antenna in storage vessel

	Media group	Measuring range
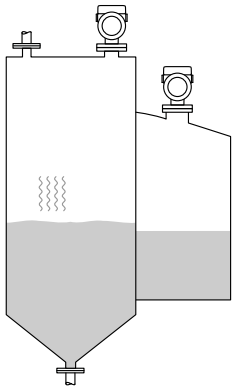	**A** (ε_r 1.4 to 1.9)	12 m (39 ft)
	B (ε_r 1.9 to 4)	23 m (75 ft)
	C (ε_r 4 to 10)	30 m (98 ft)
	D (ε_r >10)	30 m (98 ft)

Measurement in buffer vessel

Buffer vessel - measuring conditions
Moving medium surface (e.g. permanent free filling from above, mixing jets)

40 mm (1.5 in) antenna in buffer vessel

	Media group	Measuring range
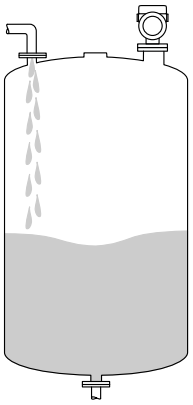	**A** (ε_r 1.4 to 1.9)	7 m (23 ft)
	B (ε_r 1.9 to 4)	13 m (43 ft)
	C (ε_r 4 to 10)	20 m (65.6 ft)
	D (ε_r >10)	20 m (65.6 ft)

80 mm (3 in) antenna in buffer vessel

	Media group	Measuring range
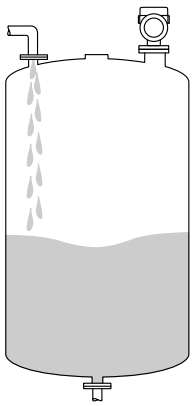	**A** (ε_r 1.4 to 1.9)	7.5 m (25 ft)
	B (ε_r 1.9 to 4)	15 m (49 ft)
	C (ε_r 4 to 10)	28 m (92 ft)
	D (ε_r >10)	30 m (98 ft)

Measurement in vessel with agitator

Vessel with agitator - measuring conditions
Turbulent medium surface (e.g. from filling from above, stirrers and baffles)

40 mm (1.5 in) antenna in vessel with agitator

	Media group	Measuring range
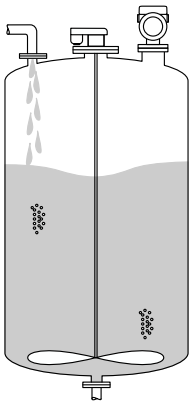	**A** (ε_r 1.4 to 1.9)	4 m (13 ft)
	B (ε_r 1.9 to 4)	5 m (16.4 ft)
	C (ε_r 4 to 10)	13 m (43 ft)
	D (ε_r >10)	20 m (65.6 ft)

80 mm (3 in) antenna in vessel with agitator

	Media group	Measuring range
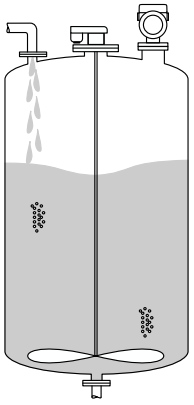	**A** (ε_r 1.4 to 1.9)	4 m (13 ft)
	B (ε_r 1.9 to 4)	7 m (23 ft)
	C (ε_r 4 to 10)	15 m (49 ft)
	D (ε_r >10)	25 m (82 ft)

Operating frequency

approx. 80 GHz

Up to eight devices can be installed in a tank without the devices mutually influencing one another.

Transmission power

- Peak power: <1.5 mW
- Average output power: <70 µW

Output

Output signal

- 4 to 20 mA with superimposed digital communication protocol HART, 2-wire
- The current output offers a choice of three different operating modes:
  - 4 to 20.5 mA
  - NAMUR NE 43: 3.8 to 20.5 mA (factory setting)
  - US mode: 3.9 to 20.5 mA

Signal on alarm for devices with current output

Current output
Signal on alarm in accordance with NAMUR recommendation NE 43.
- Max. alarm: can be set from 21.5 to 23 mA
- Min. alarm: < 3.6 mA (factory setting)

Operating tool via digital communication
Status signal (according to NAMUR Recommendation NE 107):
Plain text display

Load

In order to guarantee sufficient terminal voltage, a maximum load resistance R_L (including line resistance) must not be exceeded, depending on the supply voltage U of the supply unit.

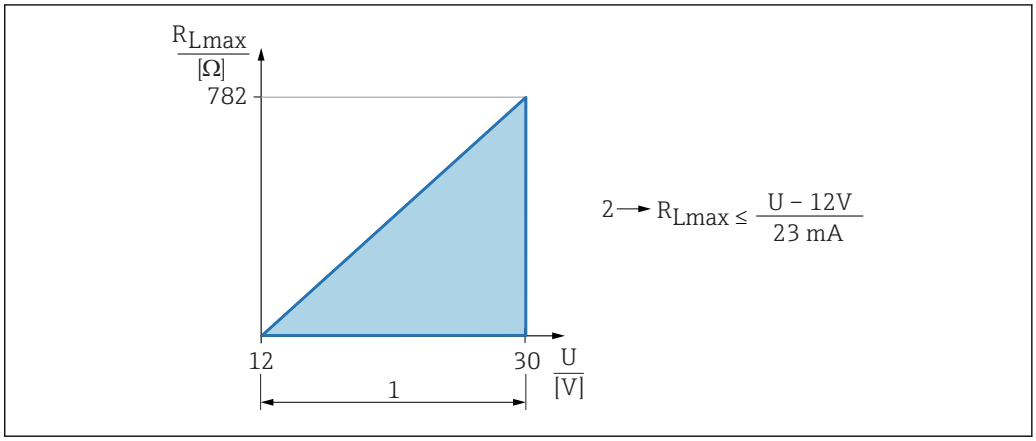

1 Power supply 12 to 30 V
2 R_{Lmax} maximum load resistance
U Supply voltage

If load is too great:
- Failure current is indicated and error message is displayed (indication: MIN alarm current)
- Periodic checking to establish if it is possible to quit fault state

Operation via handheld terminal or PC with operating program: take minimum communication resistor of 250 Ω into consideration.

Damping

Damping affects all continuous outputs.
Factory setting: 0 s(can be set from 0 to 999 s)

Ex connection data

See the separate technical documentation (Safety Instructions (XA)) on www.endress.com/download.

Linearization

The linearization function of the device allows the conversion of the measured value into any unit of length, weight, flow or volume.

Pre-programmed linearization curves

Linearization tables for calculating the volume in the following vessels are pre-programmed into the device:
- Pyramid bottom
- Conical bottom
- Angled bottom
- Horizontal cylinder
- Sphere

Linearization tables for calculating the flow rate are pre-programmed into the device and include the following:
- Flumes
  - Khafagi Venturi flume
  - Venturi flume
  - Parshall flume
  - Palmer Bowlus flume
  - Trapezoidal flume (ISO 4359)
  - Rectangular flume (ISO 4359)
  - U-shaped flume (ISO 4359)
- Weirs
  - Trapezoidal weir
  - Rectangular broad-crested weir (ISO 3846)
  - Rectangular thin-plate weir (ISO 1438)
  - V-notch thin-plate weir (ISO 1438)
- Standard formula

Other linearization tables of up to 32 value pairs can be entered manually.

For further information on flow measurement over open channels and weirs, see SD03445F.

Totalizer

The device offers a totalizer which adds up the flow rate. The totalizer cannot be reset.

Protocol-specific data

Manufacturer ID:
17(0x0011)

Device type ID:
0x11DE

Device revision:
2

HART specification:
7.6

DD version:
1

Device description files (DTM, DD)
Information and files at:
- www.endress.com
  On the product page for the device: Documents/Software → Device drivers
- www.fieldcommgroup.org

HART load:
Min. 250 Ω

The following measured values are assigned to the device variables at the factory:

Device variable	Measured value
Primary variable (PV) [1]	Level linearized
Secondary variable (SV)	Distance
Tertiary variable (TV)	Absolute echo amplitude
Quaternary variable (QV)	Relative echo amplitude

1) The PV is always applied to the current output.

Choice of HART device variables
- Level linearized
- Distance
- Electronics temperature
- Sensor temperature
- Absolute echo amplitude
- Relative echo amplitude
- Area of incoupling
- Percent of range
- Loop current
- Flow
- Totalizer value
- Not used

Supported functions
- Burst mode
- Additional transmitter status
- Device locking

Wireless HART data

Minimum start-up voltage:
12 V

Start-up current:
< 3.6 mA

Starting time:
< 15 s

Minimum operating voltage:
12 V

Multidrop current:
4 mA

Time to establish connection:
< 30 s

Power supply

Cable assignment

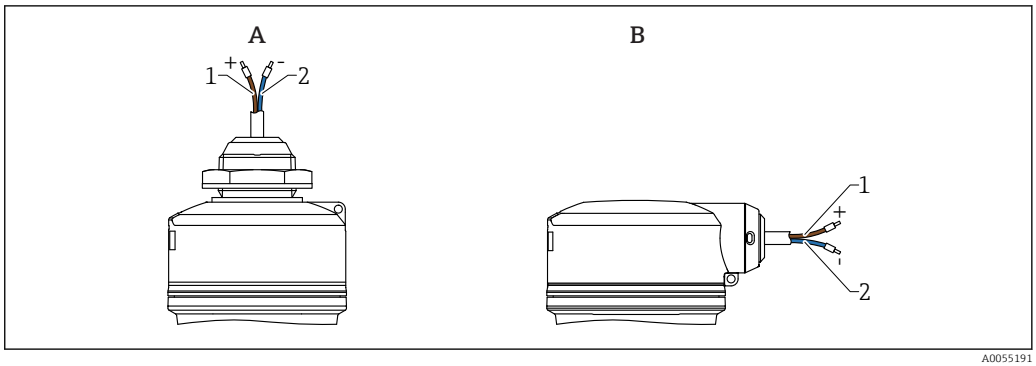

3 Cable assignment

A Cable entry from above
B Side cable entry
1 Plus, brown wire
2 Minus, blue wire

Supply voltage

12 to 30 V DC on a DC power unit

The power unit must be safety-approved (e.g. PELV, SELV, Class 2) and must comply with the relevant protocol specifications.

Protective circuits against reverse polarity, HF influences and overvoltage peaks are installed.

Power consumption

- Non-hazardous area: To meet device safety specifications according to the IEC 61010 standard, the installation must ensure that the maximum current is limited to 500 mA.
- Hazardous area: The maximum current is restricted to Ii = 100 mA by the transmitter power supply unit when the measuring instrument is used in an intrinsically safe circuit (Ex ia).

Potential equalization

No special measures for potential equalization are required.

Connecting the device

Function diagram of 4 to 20 mA HART

Connection of the device with HART communication, power source and 4 to 20 mA indicator

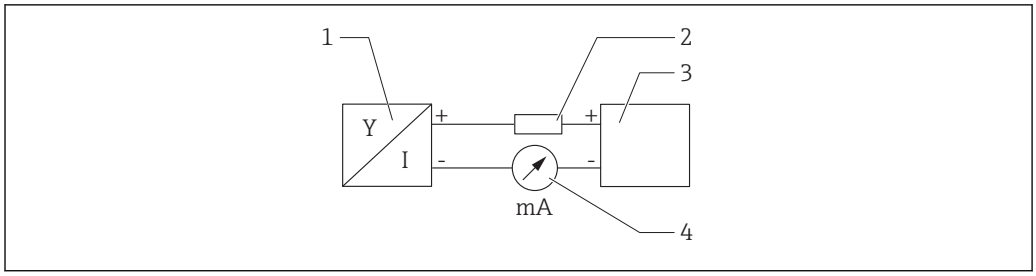

4 *Function diagram of HART connection*

1 Device with HART communication
2 HART resistor
3 Power supply
4 Multimeter or ammeter

The HART communication resistor of 250 Ω in the signal line is always necessary in the case of a low-impedance power supply.

The voltage drop to be taken into account is:
Max. 6 V for 250 Ω communication resistor

Function diagram of HART device, connection with RIA15, display only without operation, without communication resistor

The RIA15 remote display can be ordered together with the device.

Alternatively available as an accessory, for details see Technical Information TI01043K and Operating Instructions BA01170K

Terminal assignment RIA15

- **+**
  Positive connection, current measurement
- **-**
  Negative connection, current measurement (without backlighting)
- **LED**
  Negative connection, current measurement (with backlighting)
- ⏚
  Functional grounding: Terminal in housing

The RIA15 process indicator is loop-powered and does not require any external power supply.

The voltage drop to be taken into account is:
- ≤1 V in the standard version with 4 to 20 mA communication
- ≤1.9 V with HART communication
- and an additional 2.9 V if display light is used

Connection of the HART device and RIA15 without backlighting

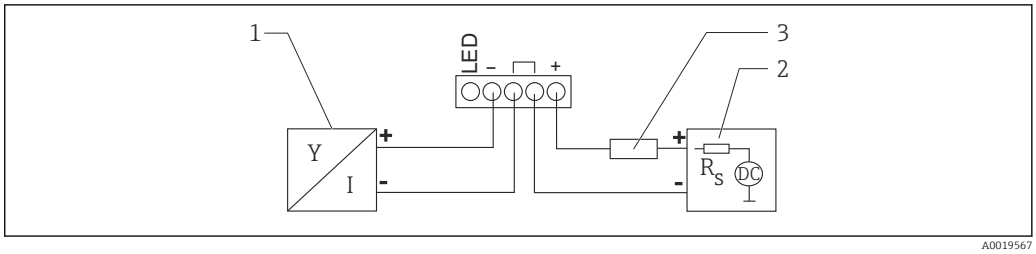

5 *Function diagram of HART device with RIA15 process indicator without light*

1 *Device with HART communication*
2 *Current supply*
3 *HART resistor*

Connection of the HART device and RIA15 with backlighting

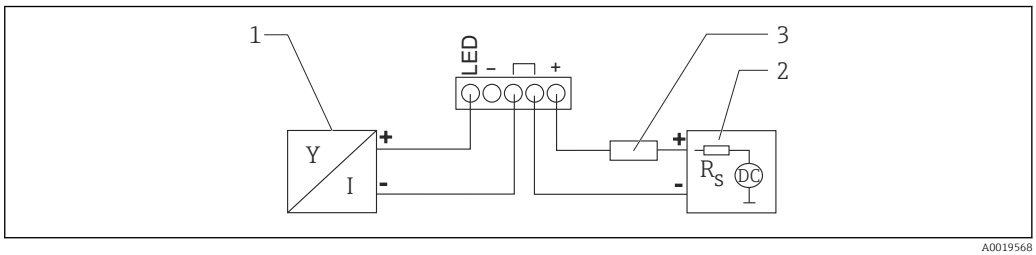

6 *Function diagram of HART device with RIA15 process indicator with light*

1 *Device with HART communication*
2 *Current supply*
3 *HART resistor*

Function diagram of HART device, RIA15 display with operation, with communication resistor

The voltage drop to be taken into account is:
Max. 7 V

Alternatively available as an accessory, for details see Technical Information TI01043K and Operating Instructions BA01170K

Connection of the HART communication resistor module, RIA15 without backlighting

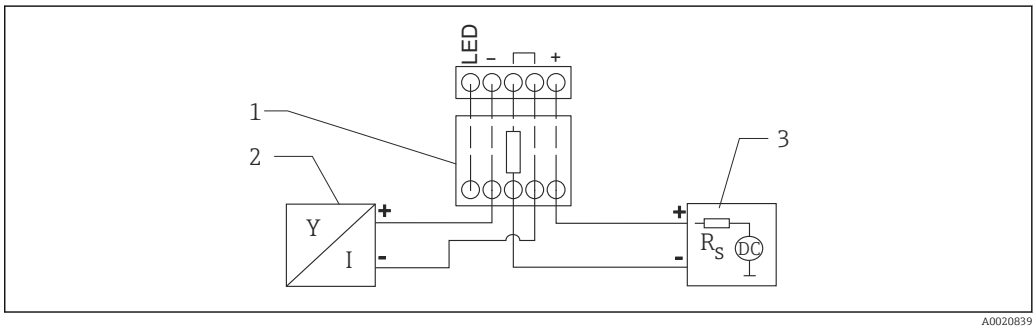

7 *Function diagram of HART device, RIA15 without light, HART communication resistor module*

1 *HART communication resistor module*
2 *Device with HART communication*
3 *Current supply*

Connection of the HART communication resistor module, RIA15 with backlighting

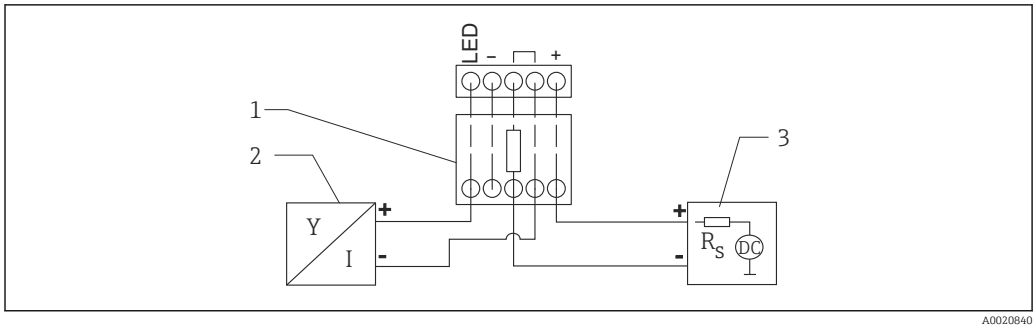

8 Function diagram of HART device, RIA15 with light, HART communication resistor module

1 HART communication resistor module
2 Device with HART communication
3 Current supply

Cable specification

Unshielded cable, wire cross-section 0.5 mm²
- Resistant to UV and weather conditions as per ISO 4892-2
- Flame resistance according to IEC 60332-1-2

As per IEC 60079-11 section 9.4.4, the cable is designed for a tensile strength of 30 N (6.74 lbf) (over a period of 1 h).

The device is available in cable lengths of 5 m (16 ft), 10 m (32 ft), 15 m (49 ft), 20 m (65 ft), 30 m (98 ft) and 50 m (164 ft).

User-defined lengths up to total length of 300 m (980 ft) are possible in increments of one meter (order option "1") or one foot (order "2").

For devices with marine approval:
- Only available with a length of 10 m (32 ft) and "user-defined"
- Halogen-free as per IEC 60754-1
- No development of corrosive fire gases in accordance with IEC 60754-2
- Low flue gas density in accordance with IEC 61034-2

Overvoltage protection

The device satisfies the IEC/DIN EN 61326-1 product standard (Table 2 Industrial environment). Depending on the type of connection (DC power supply, input line, output line), different test levels are used to prevent transient overvoltages (IEC/DIN EN 61000-4-5 Surge) in accordance with IEC/DIN EN 61326-1: Test level for DC power supply lines and IO lines: 1000 V wire to ground.

Devices for the "protection by enclosure" explosion protection are equipped with an integrated overvoltage protection system.

Overvoltage category

In accordance with IEC/DIN EN 61010-1, the device is intended for use in networks with overvoltage protection category II.

Performance characteristics

Reference operating conditions

- As per IEC 62828-1/IEC 62828-4
- Ambient temperature T_A = constant, in the range of +21 to +33 °C (+70 to +91 °F)
- Humidity φ = constant, in the range of: 5 to 80 % RH ± 5 %
- Atmospheric pressure p_U = constant, in the range of: 860 to 1060 mbar (12.47 to 15.37 psi)
- Load with HART: 250 Ω
- Supply voltage: DC 24 V ±3 V
- Reflector: metal plate with diameter ≥ 1 m (40 in)
- No major interference echoes inside the signal beam

Response time

- HART: acyclic: min. 330 ms, typically 590 ms (depending on commands and number of preambles)
- HART: cyclic (burst): min. 160 ms, typically 350 ms (depending on commands and number of preambles)

Resolution

Current output: < 1 µA

Digital: 1 mm (0.04 in)

Maximum measurement error

Reference accuracy

Accuracy

The accuracy is the sum of the non-linearity, non-repeatability and hysteresis.

For liquids:
- Measuring distance up to 0.25 m (0.82 ft): max. ±10 mm (±0.39 in)
- Measuring distance > 0.25 m (0.82 ft): ±2 mm (±0.08 in)

For solids:
- Measuring distance up to 0.8 m (2.6 ft): max. ±20 mm (±0.79 in)
- Measuring distance > 0.8 m (2.6 ft): ±4 mm (±0.16 in)

Non-repeatability

Non-repeatability is already included in the accuracy.
≤ 1 mm (0.04 in)

If conditions deviate from the reference operating conditions, the offset/zero point that results from the installation conditions can be up to ±4 mm (±0.16 in). This additional offset/zero point can be eliminated by entering a correction (**Level correction** parameter) during commissioning.

Differing values in near-range applications for liquids

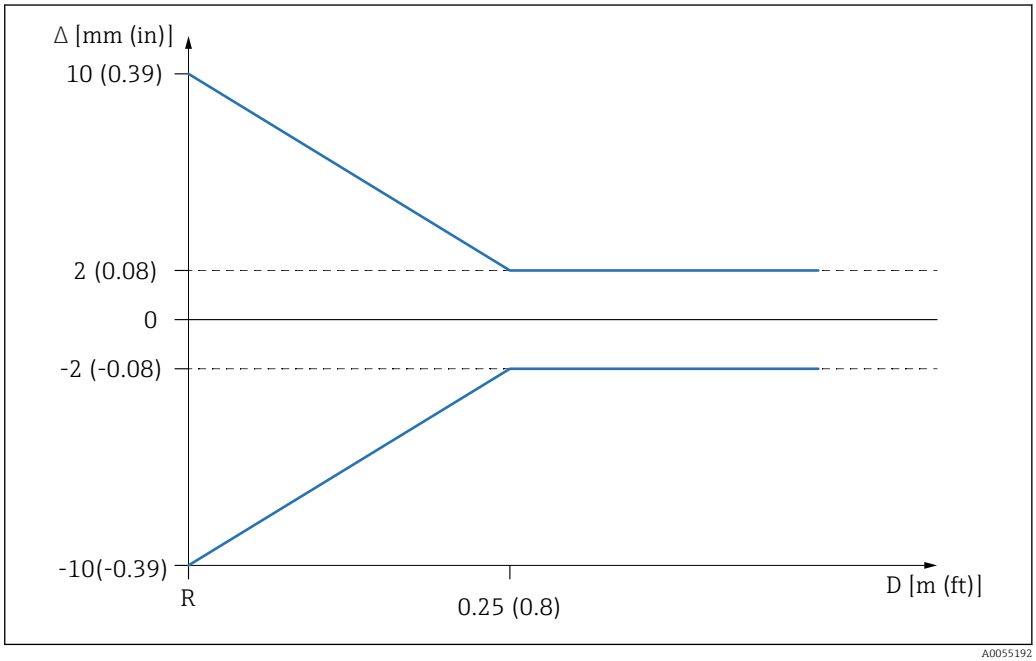

9 *Maximum measurement error in near-range applications*

Δ Maximum measurement error
R Reference point of the distance measurement
D Distance from reference point of antenna

Differing values in near-range applications for solids

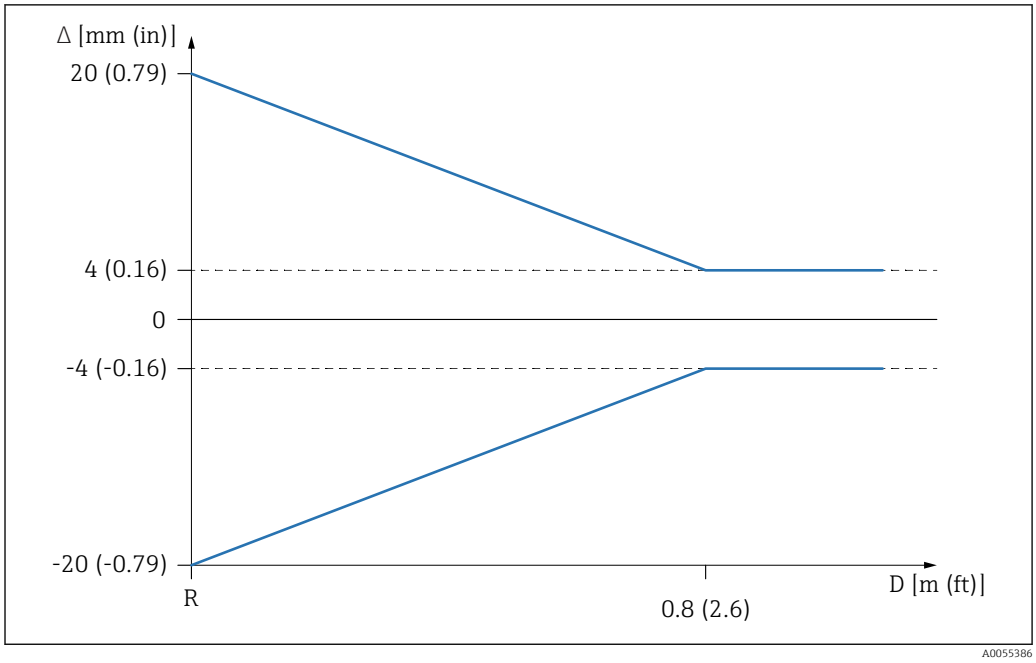

10 Maximum measurement error in near-range applications

Δ Maximum measurement error
R Reference point of the distance measurement
D Distance from reference point of antenna

Influence of ambient temperature

The output changes due to the effect of the ambient temperature with respect to the reference temperature.

The measurements are performed according to IEC 61298-3 / IEC 60770-1

Digital output (HART)
Average T_C = ±2 mm (±0.08 in)/10 K

Analog (current output)
- Zero point (4 mA): average T_C = 0.02 %/10 K
- Span (20 mA): average T_C = 0.05 %/10 K

Reaction time

According to IEC 61298-2 / IEC 60770-1 , the step response time is the time following an abrupt change in the input signal up until the changed output signal has adopted 90 % of the steady-state value for the first time.

The response time can be configured.

The following step response times apply (in accordance with IEC 61298-2/IEC 60770-1) when damping is switched off:
- Measuring rate ≤ 250 ms at operating voltage 24 V
- Step response time < 1 s

Warm-up time

The warm-up time (in accordance with IEC 62828-4) indicates the time required for the device to reach its maximum accuracy or performance after the supply voltage is energized.

Warm-up time: ≤ 15 s

Installation

Installation types

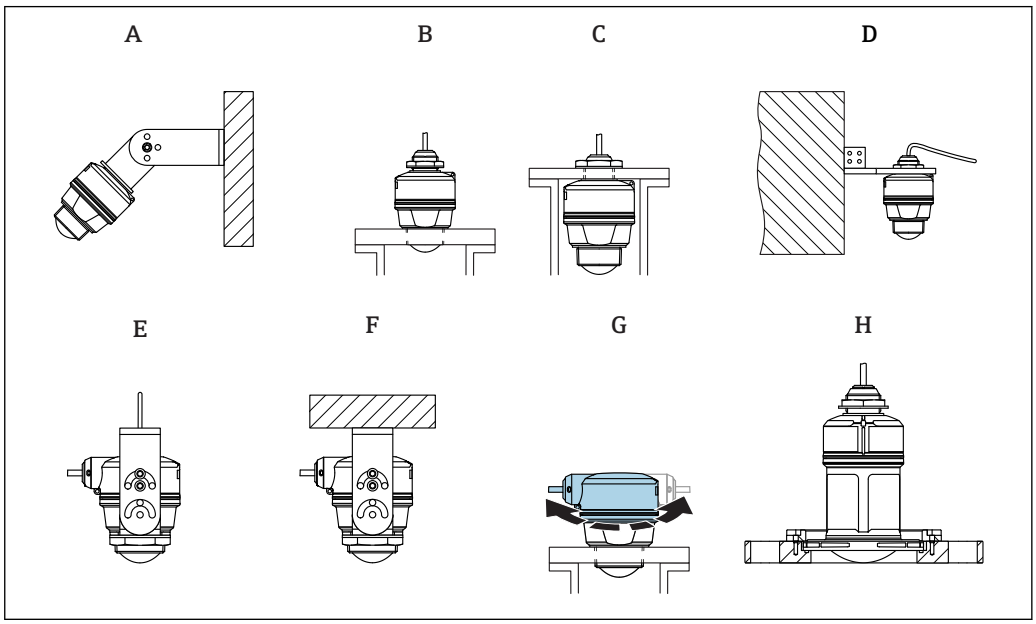

11 *Wall or ceiling mount*

A Wall mounting adjustable
B Tightened at antenna end process connection
C Tightened at cable entry from above process connection
D Wall mounting with cable entry from above process connection
E Rope mounting with cable entry at the side
F Ceiling mounting with cable entry at the side
G Cable entry at the side, top housing section can be rotated
H Mounting with UNI slip-on flange

Please note the following:
- The sensor cables are not designed as supporting cables. Do not use them for suspension purposes.
- For rope mounting, the rope must be provided by the customer.
- Always operate the device in a vertical position in free-space applications.
- For devices with side cable outlet and 80 mm antenna, installation is only possible with a UNI slip-on flange.

Mounting location

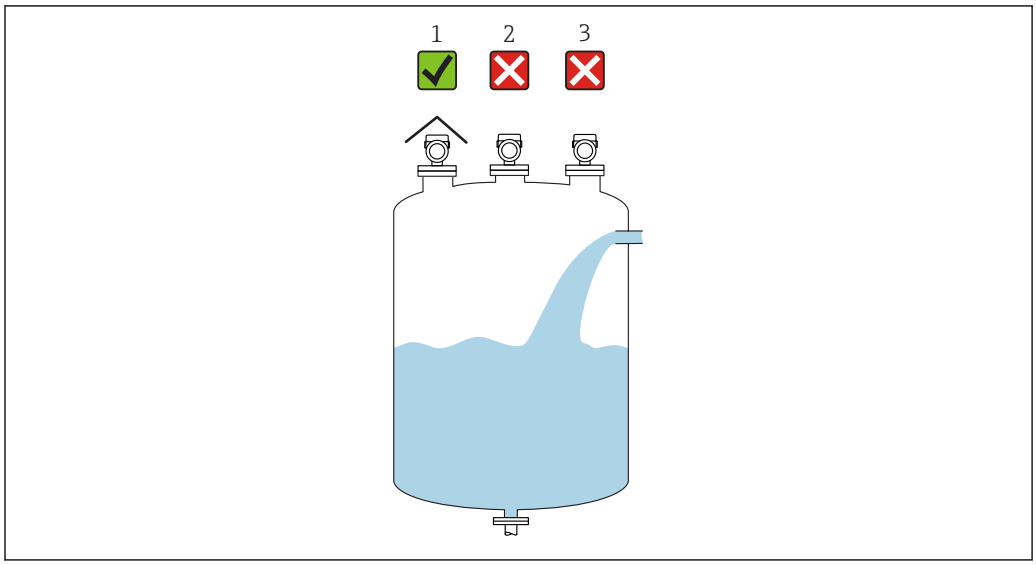

A0055811

1 *Use of a weather protection cover; protection from direct sunlight or rain*
2 *Installation not centered: Interferences can lead to incorrect signal analysis*
3 *Do not install above the filling curtain*

Orientation

Internal vessel fittings

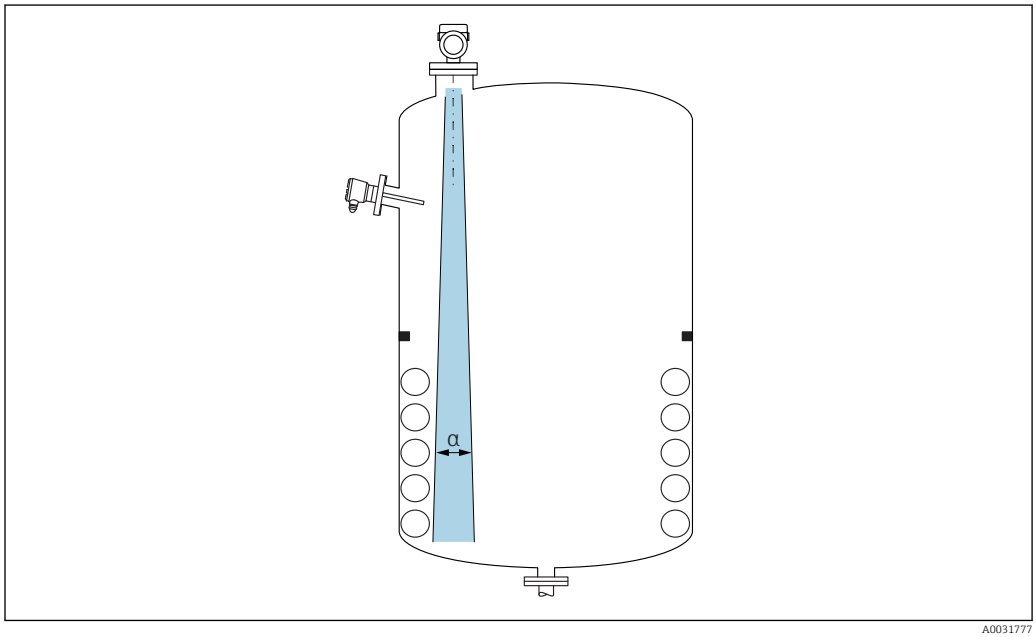

A0031777

Avoid internal fittings (level switches, temperature sensors, struts, vacuum rings, heating coils, baffles etc.) inside the signal beam. Pay attention to the beam angle **α**.

Vertical alignment of antenna axis

Align the antenna so that it is perpendicular to the product surface.

The maximum reach of the antenna can be reduced, or additional interference signals can occur, if the antenna is not installed perpendicular to the product.

Installation instructions

To ensure optimum measurement, the antenna must protrude from the nozzle. The interior of the nozzle must be smooth and must not contain any edges or welded joints. If possible, round the nozzle edge.

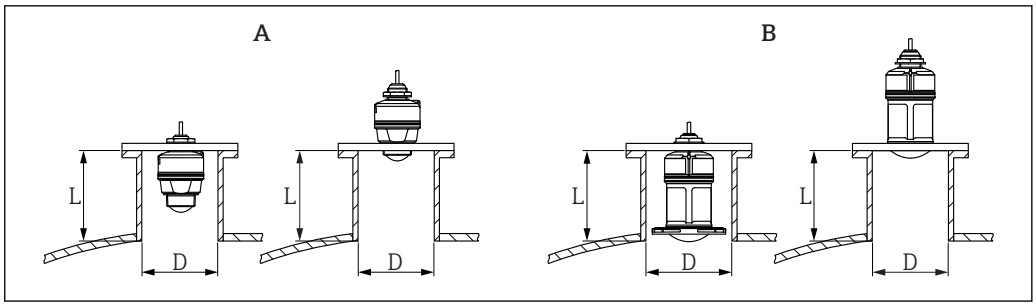

12 *Nozzle installation*

A 40 mm (1.5 in) antenna
B 80 mm (3 in) antenna

The maximum nozzle length **L** depends on the nozzle diameter **D**.

Please note the limits for the diameter and length of the nozzle.

40 mm (1.5 in) antenna, installation outside nozzle
- D: min. 40 mm (1.5 in)
- L: max. (D - 30 mm (1.2 in)) × 7.5

40 mm (1.5 in) antenna, installation inside nozzle
- D: min. 80 mm (3 in)
- L: max. 100 mm (3.94 in) + (D - 30 mm (1.2 in)) × 7.5

80 mm (3 in) antenna, installation inside nozzle
- D: min. 120 mm (4.72 in)
- L: max. 140 mm (5.51 in) + (D - 50 mm (2 in)) × 12

80 mm (3 in) antenna, installation outside nozzle
- D: min. 80 mm (3 in)
- L: max. (D - 50 mm (2 in)) × 12

Beam angle

Calculation

The beam angle is defined as the angle α at which the energy density of the radar waves reaches half the value of the maximum energy density (3dB width). Microwaves are also emitted outside the signal beam and can be reflected off interfering installations.

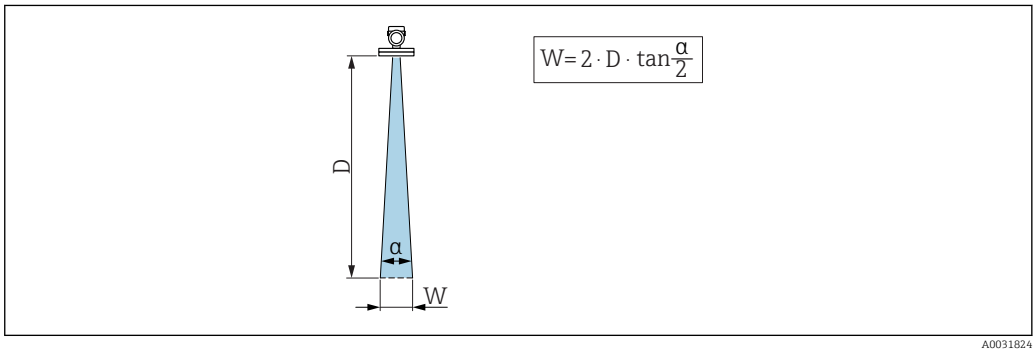

13 *Relationship between beam angle α, distance D and beamwidth diameter W*

The beamwidth diameter **W** depends on the beam angle **α** and the distance **D**.

Antenna 40 mm (1.5 in), α = 8 °

W = D × 0.14	D	W
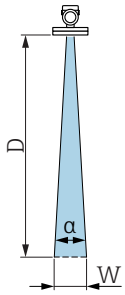	5 m (16 ft)	0.70 m (2.29 ft)
	10 m (33 ft)	1.40 m (4.58 ft)
	15 m (49 ft)	2.09 m (6.87 ft)
	20 m (66 ft)	2.79 m (9.16 ft)

Antenna 80 mm (3 in), α = 4 °

W = D × 0.07	D	W
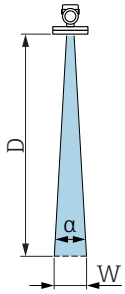	5 m (16 ft)	0.35 m (1.15 ft)
	10 m (33 ft)	0.70 m (2.30 ft)
	15 m (49 ft)	1.05 m (3.45 ft)
	20 m (66 ft)	1.40 m (4.59 ft)
	25 m (82 ft)	1.75 m (5.74 ft)
	30 m (98 ft)	2.10 m (6.89 ft)

Special installation instructions

External measurement through plastic cover or dielectric windows

- Dielectric constant of medium: $\varepsilon_r \geq 10$
- The distance from the tip of the antenna to the tank should be approx. 100 mm (4 in).
- Avoid installation positions where condensate or buildup can form between the antenna and the vessel
- In the case of outdoor installations, ensure that the area between the antenna and the tank is protected from the weather
- Do not install any fittings or attachments between the antenna and the tank that could reflect the signal

The thickness of the tank ceiling or the dielectric window depends on the ε_r of the material.

The material thickness can be a full multiple of the optimum thickness (table); it is important to note, however, that the microwave transparency decreases significantly with increasing material thickness.

Optimum material thickness

Material	Optimum material thickness
PE; ε_r 2.3	1.25 mm (0.049 in)
PTFE; ε_r 2.1	1.30 mm (0.051 in)
PP; ε_r 2.3	1.25 mm (0.049 in)
Perspex; ε_r 3.1	1.10 mm (0.043 in)

Weather protection cover

A weather protective cover is recommended for outdoor use.

The weather protective cover can be ordered as an accessory or together with the device via the product structure "Accessory enclosed".

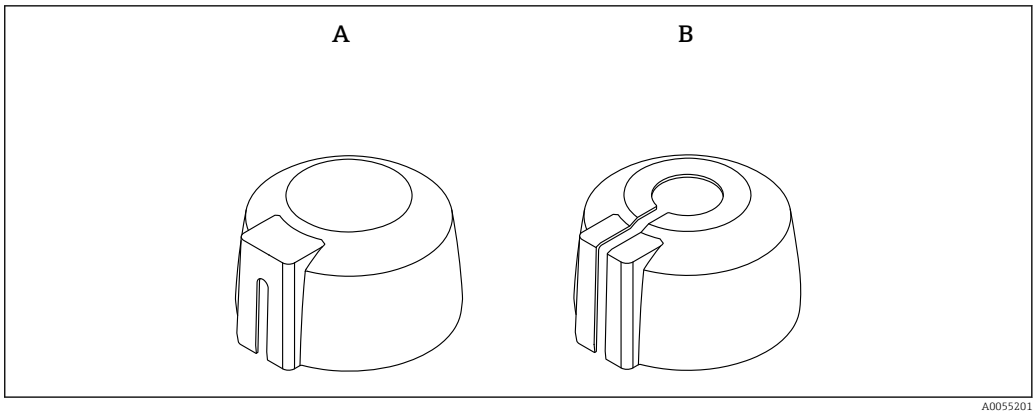

14 *Weather protective cover*

A Side cable entry
B Cable entry from above

The sensor is not completely covered by the weather protective cover.

Flooding protection tube

The flooding protection tube ensures the sensor measures the maximum level even if it is completely flooded.

The flooding protection tube can be ordered as an accessory or together with the device via the product structure "Accessory enclosed".

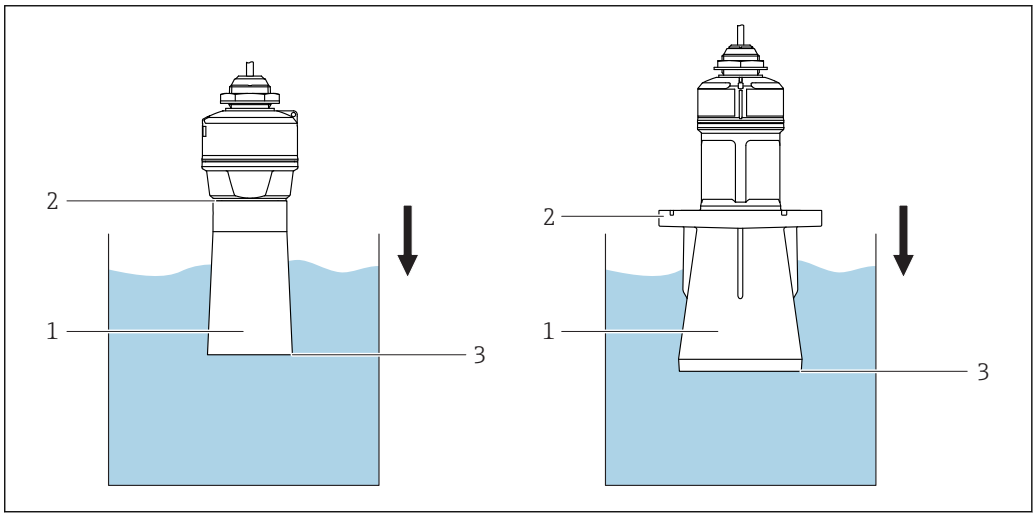

15 *Function of flooding protection tube*

1 Air pocket
2 O-ring (EPDM) seal
3 Max. level

The tube is screwed directly onto the sensor and seals off the system by means of an O-ring making it air-tight. In case of flooding, the air cushion formed within the sleeve guarantees precise detection of the maximum fill level, located directly at the sleeve's end.

Installation with mounting bracket, adjustable

The mounting bracket can be ordered as an accessory or together with the device via the product structure "Accessory enclosed".

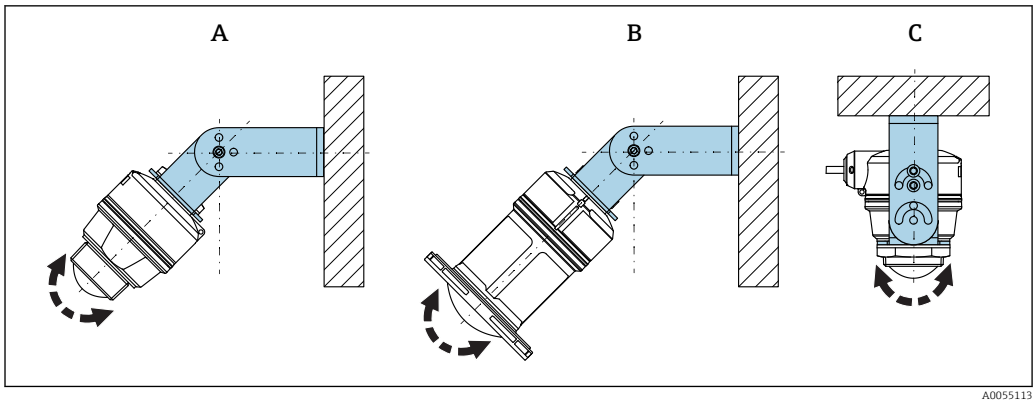

16 *Installation with mounting bracket, adjustable*

A Mounting bracket adjustable for 40 mm (1.5 in) antenna, wall mounting
B Mounting bracket adjustable for 80 mm (3 in) antenna, wall mounting
C Mounting bracket adjustable for 40 mm (1.5 in) antenna, ceiling mounting

- Wall or ceiling mounting is possible
- Align the antenna vertically to the product surface using the mounting bracket

NOTICE

There is no conductive connection between the mounting bracket and transmitter housing.
Electrostatic charging possible.
► Integrate the mounting bracket in the local potential equalization system.

Rope mounting

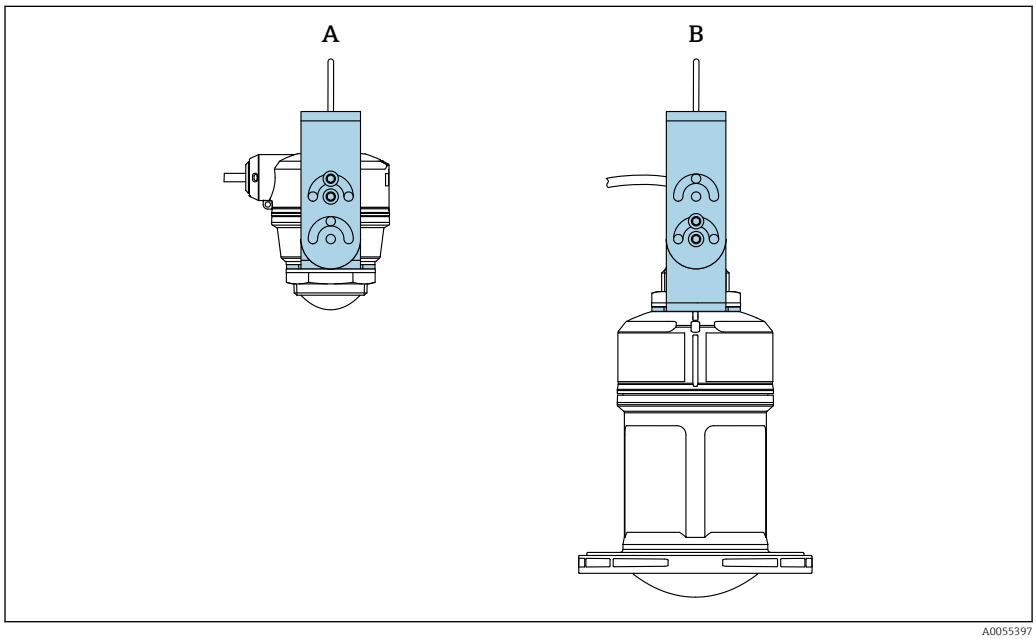

17 *Installation with rope mounting*

A Mounting bracket adjustable for 40 mm (1.5 in) antenna, rope mounting
B Mounting bracket adjustable for 80 mm (3 in) antenna, rope mounting

Align the antenna perpendicular to the product surface.

In the case of rope mounting, the cable must not be used to suspend the device.
Use separate rope.

Cantilever installation, with pivot

The cantilever, wall bracket and mounting frame can be ordered as accessories.

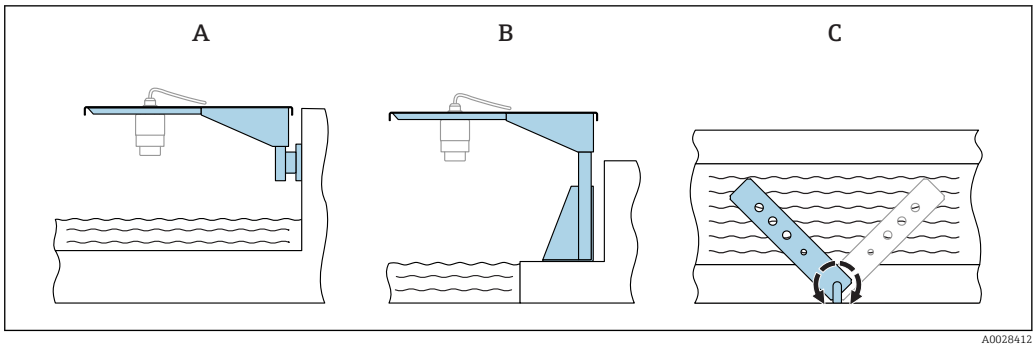

18 *Cantilever installation, with pivot*

A Cantilever with wall bracket (side view)
B Cantilever with mounting frame (side view)
C Cantilever can be turned, e.g. in order to position the device over the center of the flume (top view)

NOTICE

There is no conductive connection between the mounting bracket and transmitter housing.
Electrostatic charging possible.
▶ Integrate the mounting bracket in the local potential equalization system.

Mounting with a pivotable mounting bracket

The pivotable mounting bracket can be ordered as an accessory or together with the device via the product structure "Accessory enclosed".

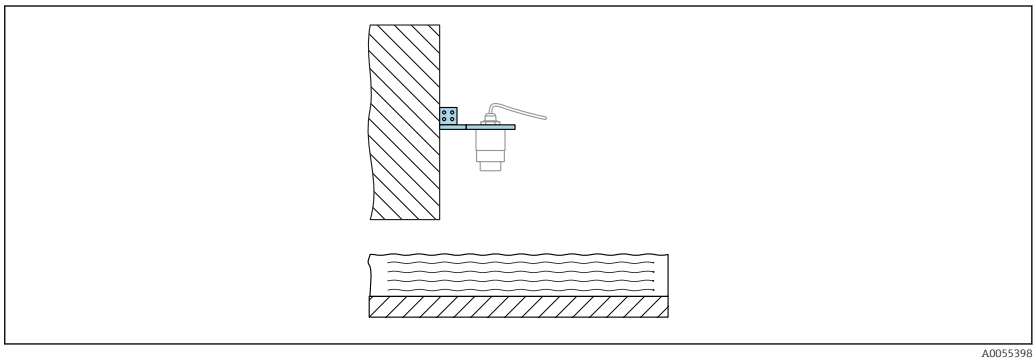

19 *Pivotable and adjustable cantilever with wall bracket (e.g. to align the device with the center of a flume)*

NOTICE

There is no conductive connection between the mounting bracket and transmitter housing.
Electrostatic charging possible.
▶ Integrate the mounting bracket in the local potential equalization system.

Environment

Ambient temperature range

−40 to +80 °C (−40 to +176 °F)

If operating outdoors in strong sunlight:
- Mount the device in the shade.
- Avoid direct sunlight, particularly in warmer climatic regions.
- Use a weather protective cover.

Storage temperature

−40 to +80 °C (−40 to +176 °F)

Climate class

According to IEC 60068-2-38 test Z/AD (relative humidity 4 to 100 %).

Operating height

Up to 5 000 m (16 404 ft) above sea level

Degree of protection	Testing according to IEC 60529 and NEMA 250: ▪ IP66, NEMA Type 4X ▪ IP68, NEMA Type 6P (24 h at 1.83 m (6.00 ft) under water)
Vibration resistance	▪ Stochastic noise (random sweep) as per IEC 60068-2-64 Case 2 ▪ Guaranteed for 5 to 2 000 Hz: 1.25 $(m/s^2)^2/Hz$, ~ 5 g
Electromagnetic compatibility (EMC)	▪ Electromagnetic compatibility as per EN 61326 series and NAMUR recommendation EMC (NE21) ▪ Maximum measured error during EMC testing: < 0.5 % of the span. For more details, refer to the EU Declaration of Conformity (www.endress.com/downloads).

Process

Process temperature, process pressure

The maximum pressure for the device depends on the lowest-rated element with regard to pressure.

Components are: process connection, optional mounting parts, or accessories.

WARNING

Incorrect design or use of the device may cause injury due to bursting parts!

- Only operate the device within the specified limits for the components!
- MWP (Maximum Working Pressure): The MWP is specified on the nameplate. This value refers to a reference temperature of +20 °C (+68 °F) and may be applied to the device for an unlimited time. Observe the temperature dependency of the maximum working pressure. For flanges, refer to the following standards for the permitted pressure values at higher temperatures: EN 1092-1 (with regard to their stability/temperature property, the materials 1.4435 and 1.4404 are grouped together under EN 1092-1; the chemical composition of the two materials can be identical), ASME B16.5, JIS B2220 (the latest version of the standard applies in each case). Maximum working pressure data that deviate from this are provided in the relevant sections of the Technical Information.
- The Pressure Equipment Directive (2014/68/EU) uses the abbreviation **PS** . This corresponds to the maximum working pressure (MWP) of the device.

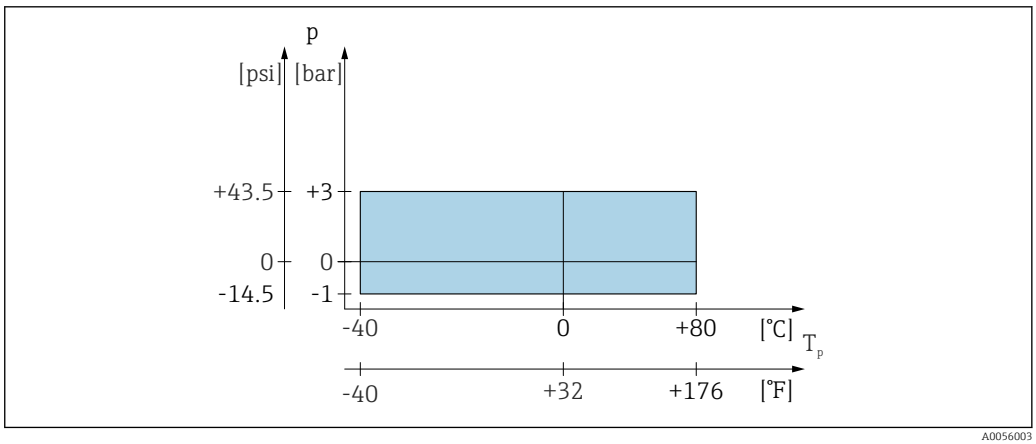

20 Permitted range for process temperature and process pressure

Process temperature range
−40 to +80 °C (−40 to +176 °F)

Process pressure range, 40 mm (1.5 in) antenna
- p_{gauge} = −1 to 3 bar (−14.5 to 43.5 psi)
- p_{abs} < =4 bar (58 psi)

Process pressure range, 80 mm (3 in) antenna with UNI slip-on flange 3", 4"
- p_{gauge} = −1 to 1 bar (−14.5 to 14.5 psi)
- p_{abs} < =2 bar (29 psi)

Process pressure range, 80 mm (3 in) antenna with UNI slip-on flange 6"
For unpressurized applications

The pressure range may be further restricted in the case of a CRN approval.

Relative permittivity

For liquids
- $\varepsilon_r \geq 1.8$
- Contact Endress+Hauser for lower ε_r values

For bulk solids
$\varepsilon_r \geq 1.6$

For applications with a lower relative permittivity than indicated, contact Endress+Hauser.

For the relative permittivity values (ε_r values) of many media commonly used in industry, please refer to:
- Relative permittivity (ε_r value), Compendium CP01076F
- The Endress+Hauser "DC Values app" (available for Android and iOS)

Mechanical construction

Dimensions

40 mm (1.5 in) antenna, cable entry from above

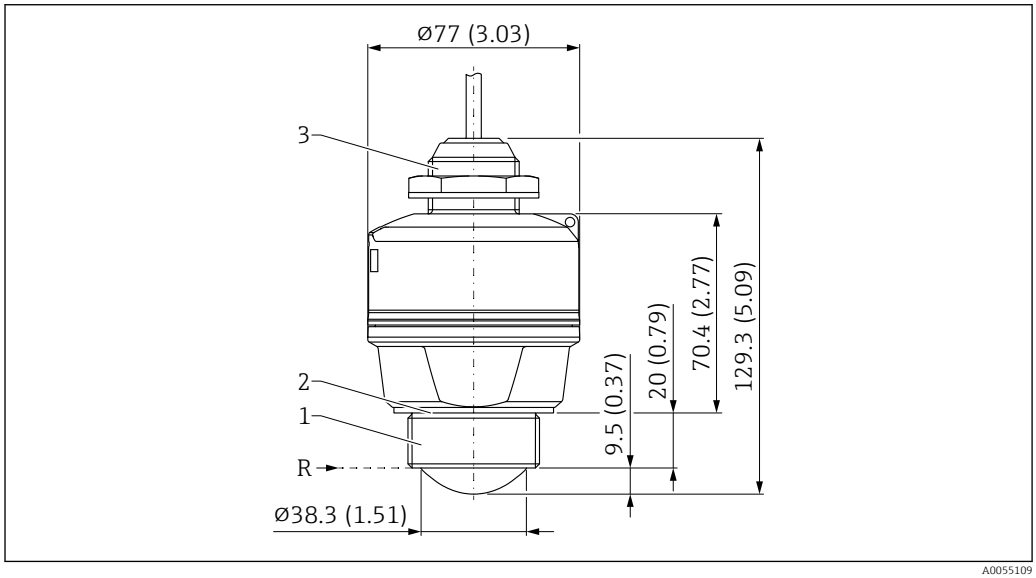

21 Dimensions; 40 mm (1.5 in) antenna with cable entry from above. Unit of measurement mm (in)

R Reference point of the measurement
1 Antenna end process connection, thread
2 EPDM seal (G 1 1/2 thread)
3 Cable entry from above process connection

The seal thickness is 2 mm (0.08 in).

40 mm (1.5 in) antenna, cable entry at the side

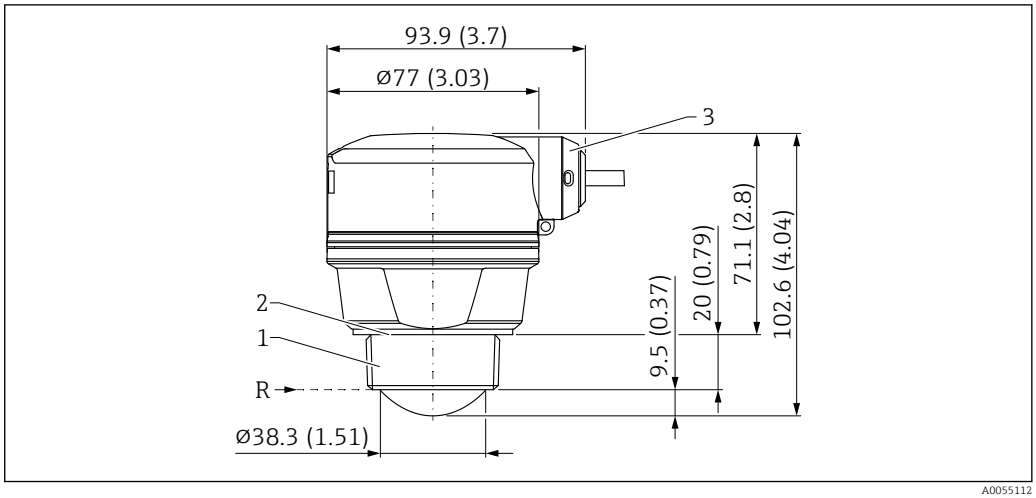

22 *Dimensions; 40 mm (1.5 in) antenna with cable entry at the side. Unit of measurement mm (in)*

R Reference point of the measurement
1 Antenna end process connection, thread
2 EPDM seal (G 1 1/2 thread)
3 Side cable entry

The seal thickness is 2 mm (0.08 in).

80 mm (3 in) antenna, cable entry from above

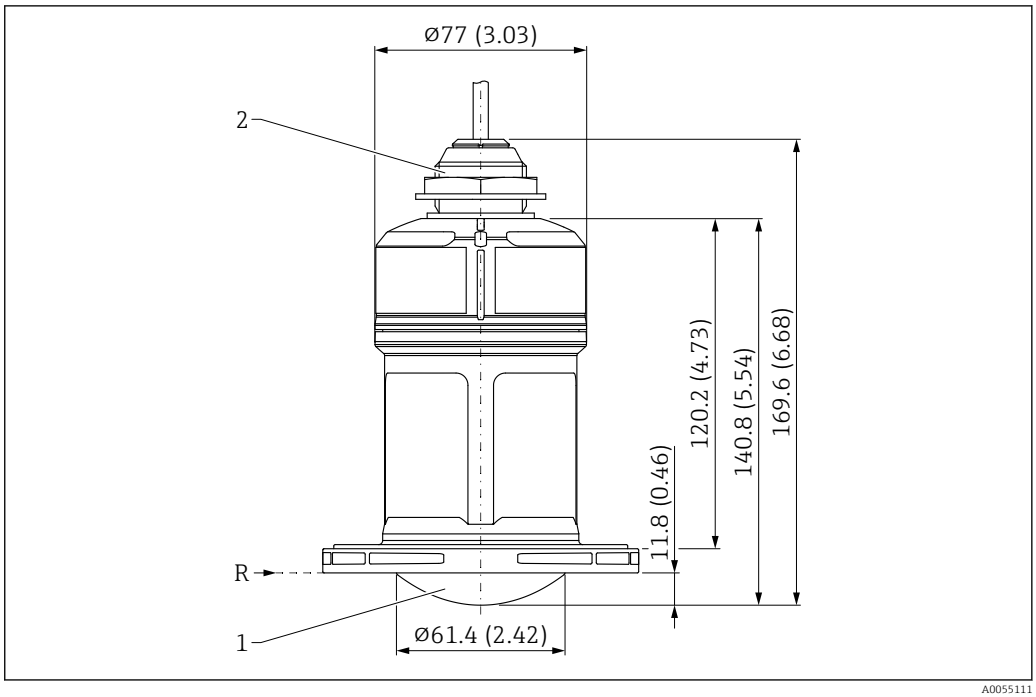

23 *Dimensions; 80 mm (3 in) antenna with cable entry from above. Unit of measurement mm (in)*

R Reference point of the measurement
1 Antenna end process connection, without; prepared for UNI slip-on flange
2 Cable entry from above process connection

80 mm (3 in) antenna, cable entry at the side

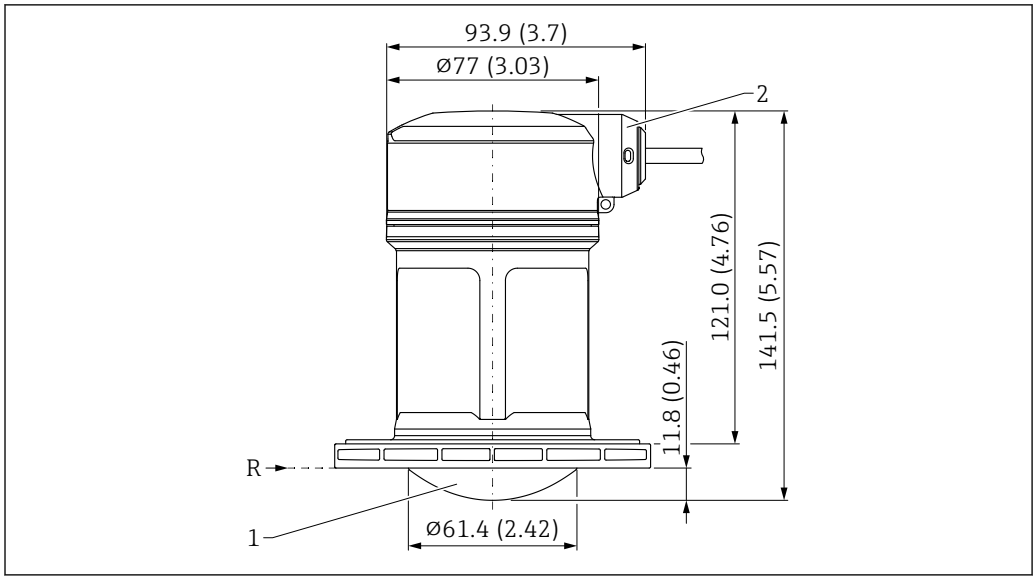

24 Dimensions; 80 mm (3 in) antenna with cable entry at the side

R Reference point of the measurement
1 Antenna end process connection, without; prepared for UNI slip-on flange
2 Side cable entry

Counter nut, cable entry from above process connection

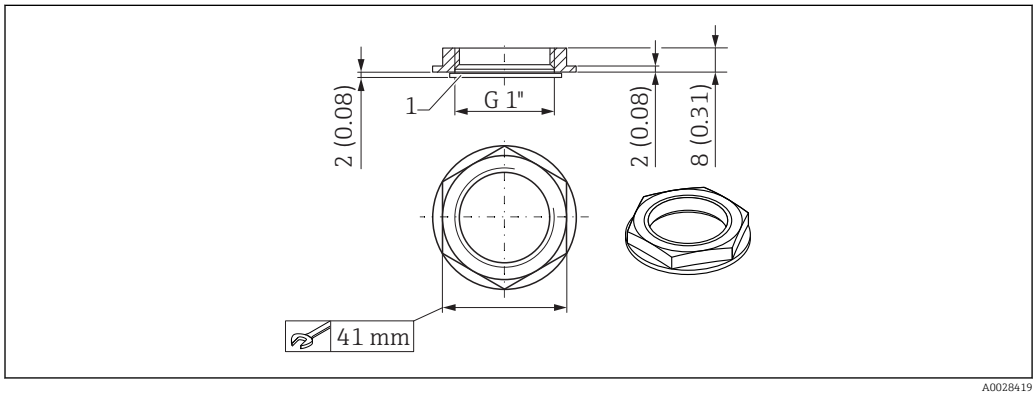

25 Dimensions; counter nut, cable entry from above process connection. Unit of measurement mm (in)

1 Seal

- The counter nut with seal (EPDM) is included in the scope of delivery
- Material: PA6.6

Weight

Weight (including 5 m (16 ft) cable)
- Device with 40 mm (1.5 in) antenna: approx. 0.5 kg (1.1 lb)
- Device with 80 mm (3 in) antenna: approx. 0.7 kg (1.5 lb)

Materials

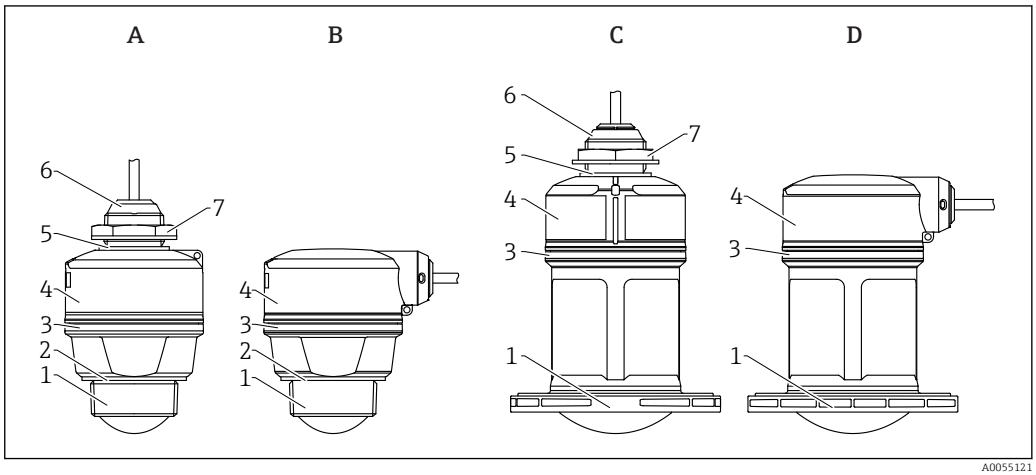

26 Device design

A 40 mm (1.5 in) antenna, cable entry from above
B 40 mm (1.5 in) antenna, cable entry at the side
C 80 mm (3 in) antenna, cable entry from above
D 80 mm (3 in) antenna, cable entry at the side
1 Antenna end process connection; PVDF
2 EPDM seal (for G 1½" thread)
3 PBT/PC design ring
4 Sensor housing/Cable entry process connection; PBT/PC (for dust ignition-proof devices: PC)
5 EPDM seal
6 Cable entry; PBT/PC (for dust ignition-proof devices: PC)
7 Counter nut; PA6.6

Connecting cable

Available cable length: 5 to 300 m (16 to 980 ft)

Material : PVC

For devices with marine approval: halogen-free cable (material: XLPE = connected polyethylene)

Operability

Operating concept

Operator-oriented menu structure for user-specific tasks
- Guidance
- Diagnostics
- Application
- System

Fast and safe commissioning
- Interactive wizard with graphical interface for guided commissioning in FieldCare/DeviceCare or SmartBlue app
- Menu guidance with brief descriptions of the individual parameter functions

Integrated data memory
Up to 100 event messages recorded in the device

Efficient diagnostic behavior increases measurement reliability
- Remedial action is integrated in plain text
- Diverse simulation options

Bluetooth® wireless technology (optional)
- Quick and easy setup with the SmartBlue app or Field Xpert SMT70/SMT77
- No additional tools or adapters required
- Encrypted single point-to-point data transmission (tested by Fraunhofer Institute) and password-protected communication via Bluetooth® wireless technology
- The device can be retrofitted with Bluetooth® wireless technology

LED indicator

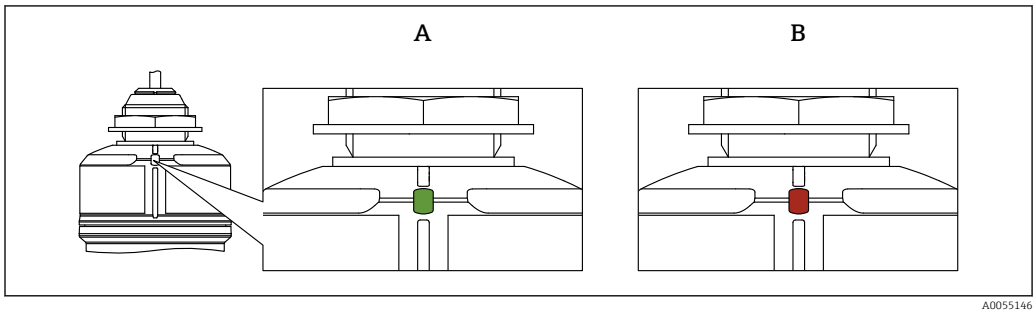

27 LED indicator on the device

A Green LED
B Red LED

Functions:
- Displays the operating status
  - Operation (green)
  - Fault (red)
- Displays an active Bluetooth® connection (flashing)

Remote operation

Via HART protocol or Bluetooth® wireless technology

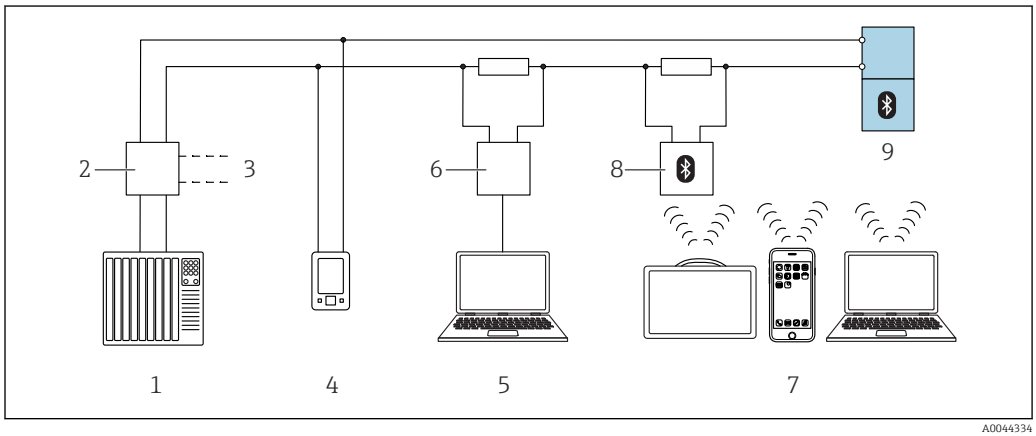

28 Options for remote operation via HART protocol

1 PLC (programmable logic controller)
2 Transmitter power supply unit, e.g. RN42 (with communication resistor)
3 Connection for Commubox FXA195 and AMS Trex™ device communicator
4 AMS Trex™ device communicator
5 Computer with operating tool (e.g. DeviceCare/FieldCare , AMS Device View, SIMATIC PDM)
6 Commubox FXA195 (USB)
7 Field Xpert SMT70/SMT77, smartphone or computer with operating tool (e.g. DeviceCare)
8 Bluetooth® modem with connecting cable (e.g. VIATOR)
9 Transmitter

Operation via Bluetooth® wireless technology (optional)

Prerequisite
- Device with Bluetooth® wireless technology order option
- Smartphone or tablet with Endress+Hauser SmartBlue app or PC with DeviceCare from version 1.07.07 or Field Xpert SMT70/SMT77

The connection has a range of up to 25 m (82 ft). The range can vary depending on environmental conditions such as attachments, walls or ceilings.

Supported operating tools

Smartphone or tablet with Endress+Hauser SmartBlue app, DeviceCare from version 1.07.07, FieldCare, AMS and PDM

Certificates and approvals

Current certificates and approvals for the product are available at www.endress.com on the relevant product page:

1. Select the product using the filters and search field.
2. Open the product page.
3. Select **Downloads**.

Other certificates and approvals for the product are available under https://www.endress.com-> Downloads.

Radio standard EN 302729

The devices are approved for unrestricted use inside and outside closed containers in countries of the EU and the EFTA. As a prerequisite, the countries must have already implemented this standard.

The standard is already implemented in the following countries:

Belgium, Bulgaria, Germany, Denmark, Estonia, France, Greece, UK, Ireland, Iceland, Italy, Liechtenstein, Lithuania, Latvia, Malta, The Netherlands, Norway, Austria, Poland, Portugal, Romania, Sweden, Switzerland, Slovakia, Spain, Czech Republic and Cyprus.

Implementation is still underway in all of the countries not listed.

Please note the following for operation of the devices outside of closed vessels:
- Installation must be carried out by properly trained, expert staff
- The device antenna must be installed in a fixed location pointing vertically downwards
- The mounting site must be located at a distance of 4 km (2.49 mi) from the astronomy stations listed below or otherwise approval must be provided by the relevant authority. If a device is installed within a radius of 4 to 40 km (2.49 to 24.86 mi) around one of the listed stations, it must not be installed at a height of more than 15 m (49 ft) above the ground

Astronomy stations

Country	Name of the station	Latitude	Longitude
Germany	Effelsberg	50° 31' 32" North	06° 53' 00" East
Finland	Metsähovi	60° 13' 04" North	24° 23' 37" East
	Tuorla	60° 24' 56" North	24° 26' 31" East
France	Plateau de Bure	44° 38' 01" North	05° 54' 26" East
	Floirac	44° 50' 10" North	00° 31' 37" West
Great Britain	Cambridge	52° 09' 59" North	00° 02' 20" East
	Damhall	53° 09' 22" North	02° 32' 03" West
	Jodrell Bank	53° 14' 10" North	02° 18' 26" West
	Knockin	52° 47' 24" North	02° 59' 45" West
	Pickmere	53° 17' 18" North	02° 26' 38" West
Italy	Medicina	44° 31' 14" North	11° 38' 49" East
	Noto	36° 52' 34" North	14° 59' 21" East
	Sardinia	39° 29' 50" North	09° 14' 40" East
Poland	Fort Skala Krakow	50° 03' 18" North	19° 49' 36" East
Russia	Dmitrov	56° 26' 00" North	37° 27' 00" East
	Kalyazin	57° 13' 22" North	37° 54' 01" East
	Pushchino	54° 49' 00" North	37° 40' 00" East
	Zelenchukskaya	43° 49' 53" North	41° 35' 32" East
Sweden	Onsala	57° 23' 45" North	11° 55' 35" East
Switzerland	Bleien	47° 20' 26" North	08° 06' 44" East

Country	Name of the station	Latitude	Longitude
Spain	Yebes	40° 31' 27" North	03° 05' 22" West
	Robledo	40° 25' 38" North	04° 14' 57" West
Hungary	Penc	47° 47' 22" North	19° 16' 53" East

As a general rule, the requirements outlined in EN 302729 must be observed.

FCC

This device complies with Part 15 of the FCC rules. Operation is subject to the following two conditions: (1) This device may not cause harmful interference, and (2) this device must accept any interference received, including interference that may cause undesired operation.

[Any] changes or modifications not expressly approved by the party responsible for compliance could void the user's authority to operate the equipment.

The devices are compliant with the FCC Code of Federal Regulations, CFR 47, Part 15, Sections 15.205, 15.207, 15.209.

To comply with FCC RF Exposure requirements for an uncontrolled environment, this device must be installed and operated to assure a minimum separation distance of at least 20 cm.

In addition, the devices are compliant with Section 15.256. For these LPR (Level Probe Radar) applications the devices must be professionally installed in a downward operating position. In addition, the devices are not allowed to be mounted in a zone of 4 km (2.49 mi) around RAS stations and within a radius of 40 km (24.86 mi) around RAS stations the maxium operation height of devices is 15 m (49 ft) above ground.

Industry Canada

Canada CNR-Gen Section 8.4

This device complies with Industry Canada licence-exempt RSS standard(s). Operation is subject to the following two conditions: (1) This device may not interference, and (2) this device must accept any interference, including interference that may cause undesired operation of the device.

Le présent appareil est conforme aux CNR d'Industrie Canada applicables aux appareils radio exempts de licence. L'exploitation est autorisée aux deux conditions suivantes : (1) l'appareil ne doit pas produire de brouillage, et (2) l'utilisateur de l'appareil doit accepter tout brouillage radioélectrique subi, même si le brouillage est susceptible d'en compromettre le fonctionnement.

[Any] changes or modifications not expressly approved by the party responsible for compliance could void the user's authority to operate the equipment.

- The installation of the LPR/TLPR device shall be done by trained installers, in strict compliance with the manufacturer's instructions.
- The use of this device is on a "no-interference, no-protection" basis. That is, the user shall accept operations of high-powered radar in the same frequency band which may interfere with or damage this device. However, devices found to interfere with primary licensing operations will be required to be removed at the user's expense.
- To comply with ISED RF Exposure requirements for an uncontrolled environment, this device must be installed and operated to assure a minimum separation distance of at least 20 cm.
- The installer/user of this device shall ensure that it is at least 10 km from the Dominion Astrophysical Radio Observatory (DRAO) near Penticton, British Columbia. The coordinates of the DRAO are latitude 49°19'15" N and longitude 119°37'12" W. For devices not meeting this 10 km separation (e.g., those in the Okanagan Valley, British Columbia,) the installer/user must coordinate with, and obtain the written concurrence of, the Director of the DRAO before the equipment can be installed or operated. The Director of the DRAO may be contacted at 250-497-2300 (tel.) or 250-497-2355 (fax). (Alternatively, the Manager, Regulatory Standards Industry Canada, may be contacted.)

Pressure equipment with permitted pressure less than 200 bar, no pressure-bearing volume

Pressure instruments with a process connection that does not have a pressurized housing do not fall within the scope of the Pressure Equipment Directive, irrespective of the maximum working pressure.

If pressure equipment does not have a pressure-bearing housing, there is no pressure accessory present within the meaning of the Directive.

Druckgeräterichtlinie DGRL (PED) 2014/68/EU, Artikel 2, Absatz 5

Ordering information

Detailed ordering information is available from your nearest sales organization www.addresses.endress.com or in the Product Configurator at www.endress.com:

1. Select the product using the filters and search field.
2. Open the product page.
3. Select **Configuration**.

Product Configurator - the tool for individual product configuration
- Up-to-the-minute configuration data
- Depending on the device: direct input of information specific to the measuring point, such as the measuring range or operating language
- Automatic verification of exclusion criteria
- Automatic creation of the order code and its breakdown in PDF or Excel output format
- Ability to order directly in the Endress+Hauser Online Shop

Tagging

Measuring point (TAG)

The device can be ordered with a tag name.

Location of tag name
In the additional specification, select:
- Stainless steel tag plate
- TAG provided by the customer
- IEC 61406 stainless steel TAG
- IEC 61406 stainless steel, stainless steel TAG
- IEC 61406 stainless steel TAG, plate provided

Definition of tag name
In the additional specification, specify:
Three lines of maximum 18 characters each
The specified tag name appears on the selected plate.

Visualization in SmartBlue app
The first 32 characters of the tag name
The tag name can always be changed specifically for the measuring point via Bluetooth® wireless technology.

Display in electronic nameplate (ENP)
The first 32 characters of the tag name

For details, refer to document SD03128P

Factory verification certificate

A factory verification certificate can be selected using the Product Configurator.

The verification points (three points) are defined at the following distances from the reference point:
- 2 m
- 4 m
- 6 m

Verification is performed under reference operating conditions.

Service

The following services, among others, can be selected using the Product Configurator.

- Cleaned of oil+grease (wetted)
- PWIS-free (paint-wetting impairment substances)
- Set medium
- Set damping
- Set max. alarm current
- Bluetooth® communication is disabled on delivery
- Customized empty/full calibration
- Product documentation on paper
  A printed (hard copy) version of test reports, declarations and inspection certificates can optionally be ordered via the **Service**, Version, **Product documentation on paper** option. The required documents can be selected under the feature **Test, certificate, declaration** and are then included with the device on delivery.

Application packages

The application package can be ordered together with the device or can be activated subsequently with an activation code. Detailed information on the relevant order code is available from the website www.endress.com or from the Endress +Hauser Sales Center.

Heartbeat Technology

Heartbeat Technology offers diagnostic functionality by means of continuous self-monitoring as well as in-situ verification of devices in the application.

Heartbeat Diagnostics

Continuous self-monitoring of the device.

Diagnostic messages output to:
- An asset management system (e.g. FieldCare or DeviceCare)
- An automation system (e.g. PLC)

Heartbeat Verification

- Monitoring of the installed device without interrupting the process, including a verification report
- Clear measuring point assessment (pass/fail) with high total test coverage as part of the manufacturer's specification
- Can be used to document normative requirements
- Meets the requirements for metrological traceability in accordance with ISO 9001 (ISO 9001:2015 Section 7.1.5.2)

The verification report can be generated via Bluetooth® and HART.

Detailed description

See Special Documentation for SD Heartbeat Technology.

Accessories

Accessories currently available for the product can be selected via the Product Configurator at www.endress.com:

1. Select the product using the filters and search field.
2. Open the product page.
3. Select **Spare parts & Accessories**.

The accessories can be partially ordered via the "Accessory enclosed" product structure.

Weather protective cover for device with cable entry from above

The sensor is not completely covered in the case of the 40 mm (1.5 in) antenna or the 80 mm (3 in) antenna.

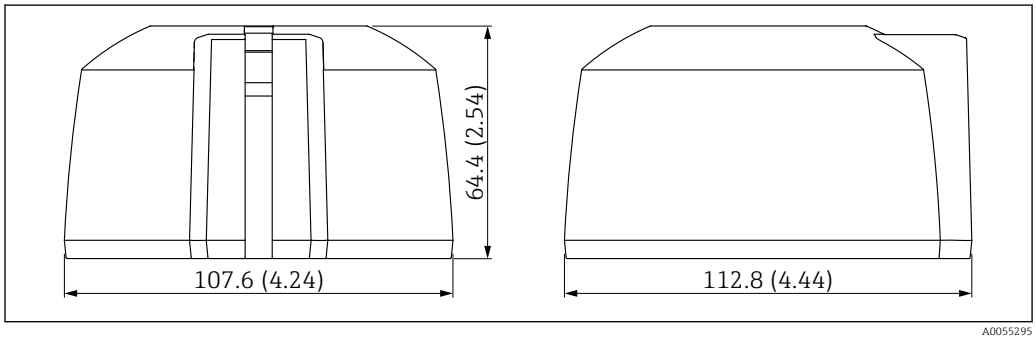

29 Dimensions for protective cover G1/NPT1, cable entry from above. Unit of measurement mm (in)

Material
PBT/PC

Order code
71662413

Weather protective cover for device with cable entry at side

The sensor is not completely covered in the case of the 40 mm (1.5 in) antenna or the 80 mm (3 in) antenna.

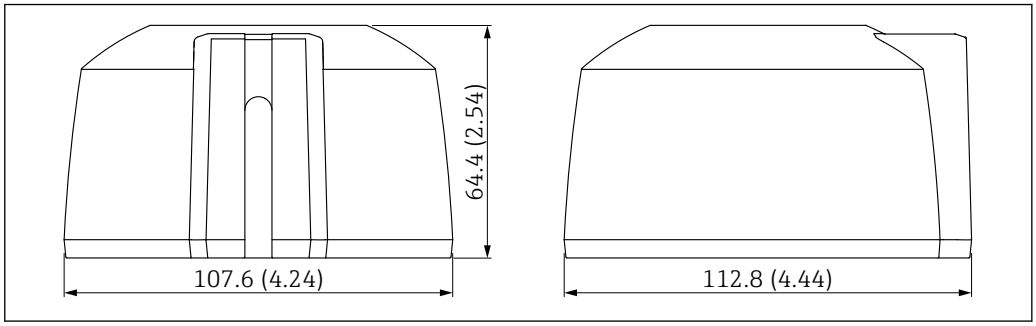

30 Dimensions for protective cover with cable entry at the side. Unit of measurement mm (in)

Material
PBT/PC

Order code
71662414

Securing nut G 1½"

Suitable for devices with G 1½" and MNPT 1½" process connection.

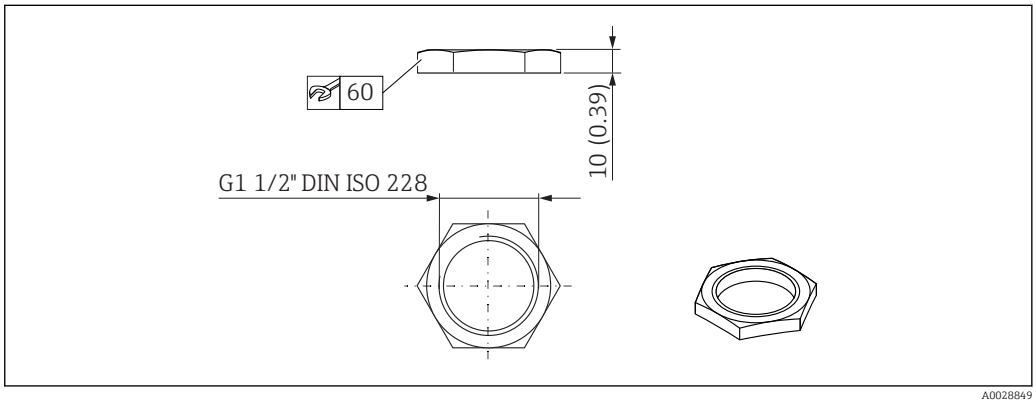

31 Dimensions of securing nut. Unit of measurement mm (in)

Material
PC

Order code
52014146

Securing nut G 2"

Suitable for devices with G 2" and MNPT 2" antenna end process connection.

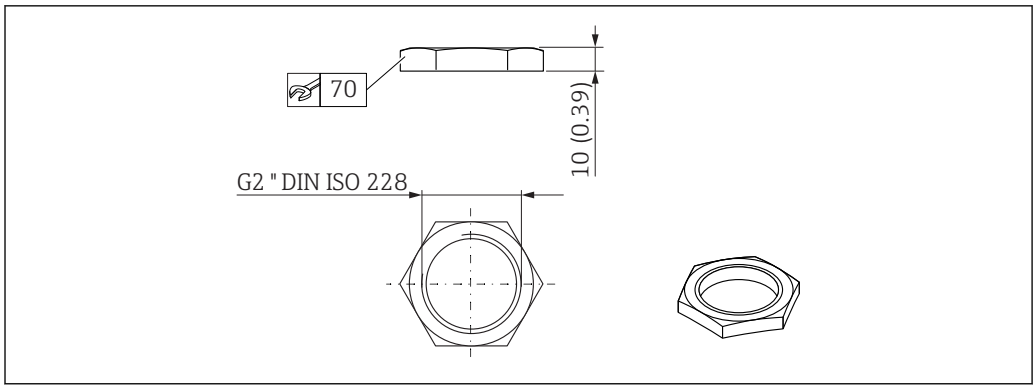

32 *Dimensions of securing nut. Unit of measurement mm (in)*

Material
PC

Order code
52000598

Uni adapter G 1½">G 2"

Temperature range −40 to 45 °C (−40 to 113 °F)

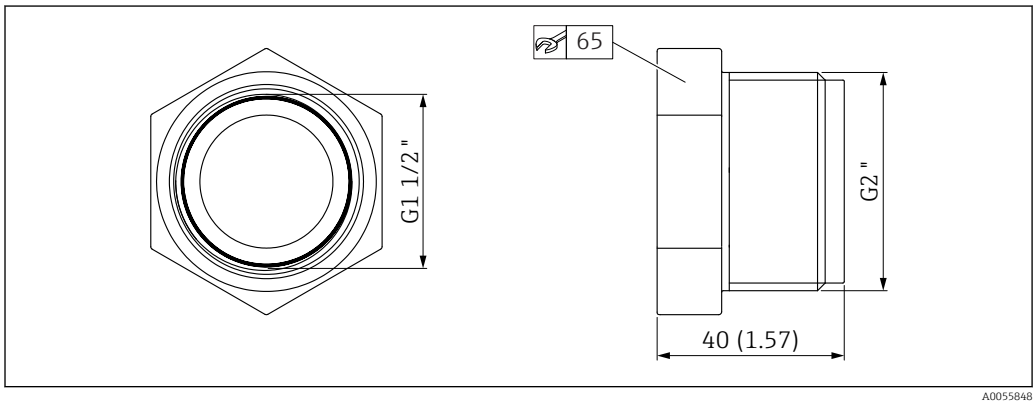

33 *Dimensions of Uni adapter*

Material
PVC

Order code
71662415

Uni adapter MNPT 1½" > MNPT 2"

Temperature range −40 to 65 °C (−40 to 150 °F)

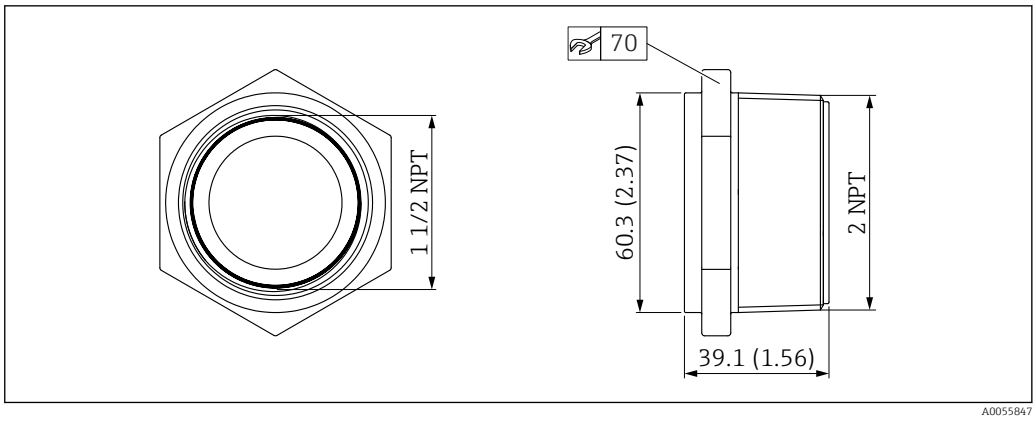

34 *Dimensions of Uni adapter*

Material
PP

Order code
71668921

Flooding protection tube 40 mm (1.5 in)

Suitable for use with devices with a 40 mm (1.5 in) antenna and G 1½" antenna end thread process connection

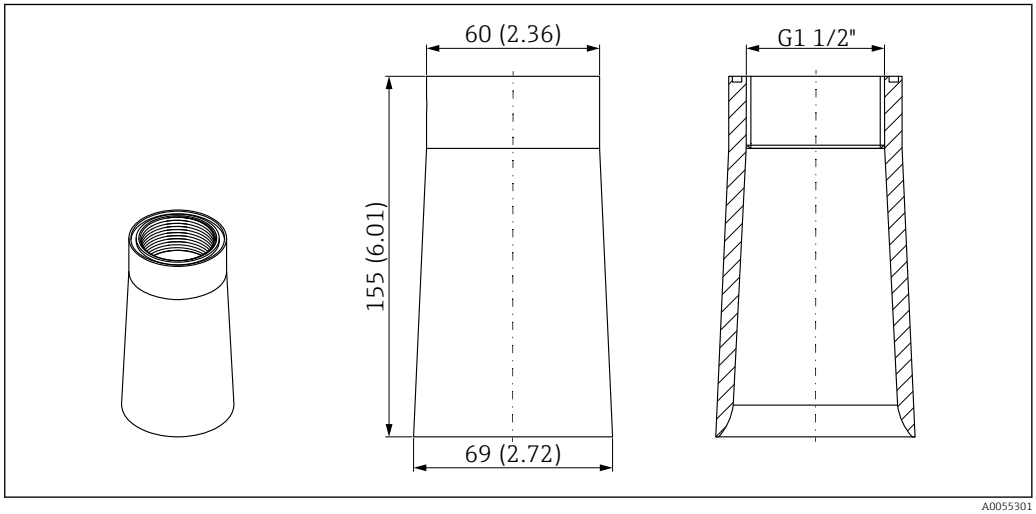

35 *Flooding protection tube dimensions 40 mm (1.5 in). Unit of measurement mm (in)*

Material
PP

Order code
71091216

Flooding protection tube 80 mm (3 in)

Suitable for use with devices with a 80 mm (3 in) antenna and antenna end process connection, "without, prepared for UNI slip-on flange > Accessories".

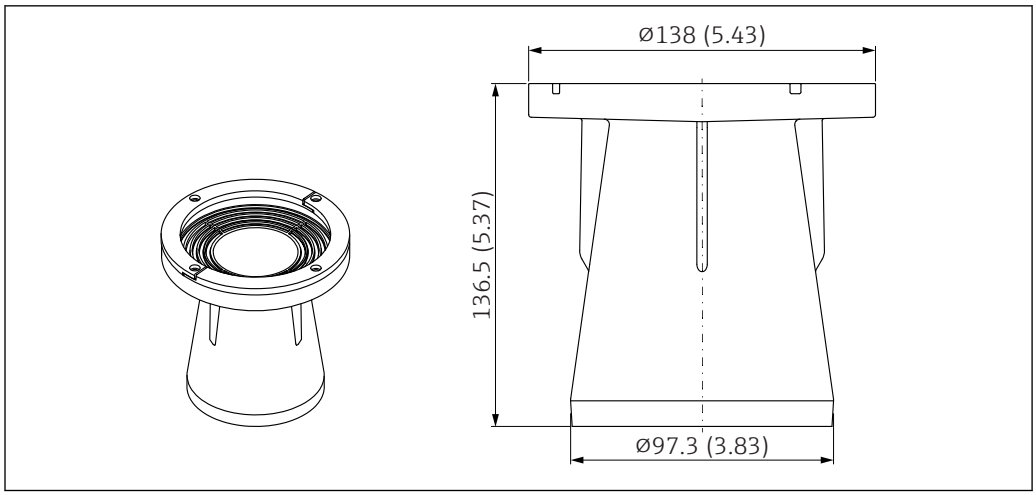

36 Flooding protection tube dimensions 80 mm (3 in). Unit of measurement mm (in)

Material
PBT/PC

Order code
71662270

Mounting bracket, adjustable, wall/rope/ceiling, 75 mm

The mounting bracket can be used for mounting on a wall, a rope or a ceiling.

Two versions are available:
- Cable entry process connection G 1"/NPT 1"
- Antenna end process connection G 1½"/NPT 1½"

Cable entry process connection G 1"/NPT 1"

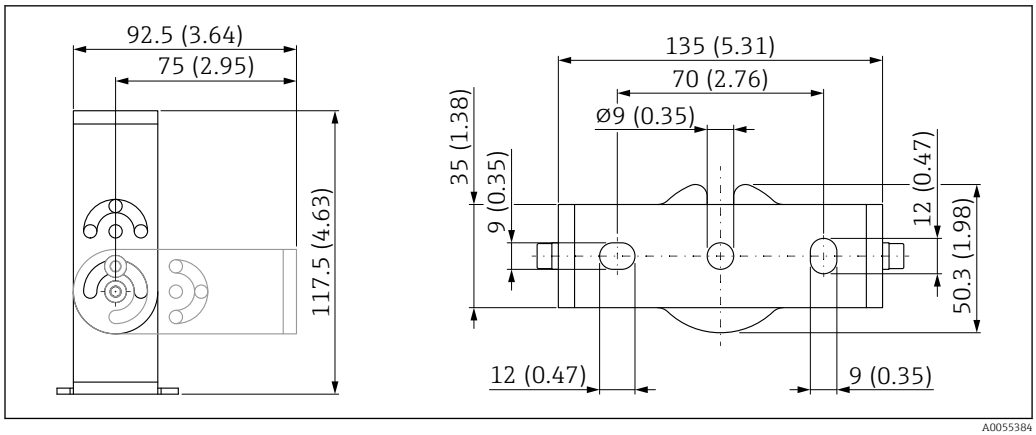

37 Dimensions of mounting bracket. Unit of measurement mm (in)

Consists of:
- 1 × mounting bracket, 316L (1.4404)
- 1 × angle bracket, 316L (1.4404)
- 3 × screws, A4
- 3 × securing disks, A4

Order number (G 1"/NPT 1")
71325079

Antenna end process connection G 1½"/NPT 1½"

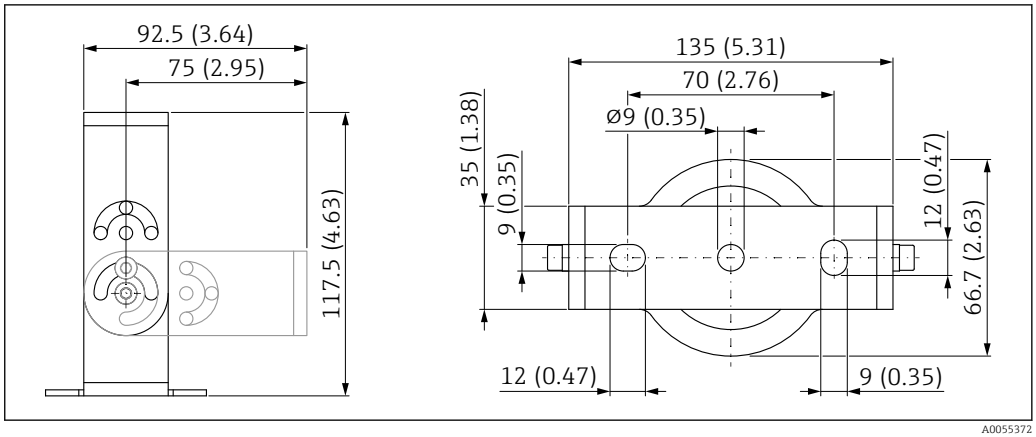

38 Dimensions of mounting bracket. Unit of measurement mm (in)

Consists of:
- 1 × mounting bracket, 316L (1.4404)
- 1 × angle bracket, 316L (1.4404)
- 3 × screws, A4
- 3 × securing disks, A4
- 1 × securing nut G 1½"

Order number (G 1½"/NPT 1½")
71662419

Mounting bracket, adjustable, wall, 200 mm

The mounting bracket can be used for mounting on a wall.

Two versions are available:
- Cable entry process connection G 1"/NPT 1"
- Antenna end process connection G 1½"/NPT 1½"

Cable entry process connection G 1"/NPT 1"

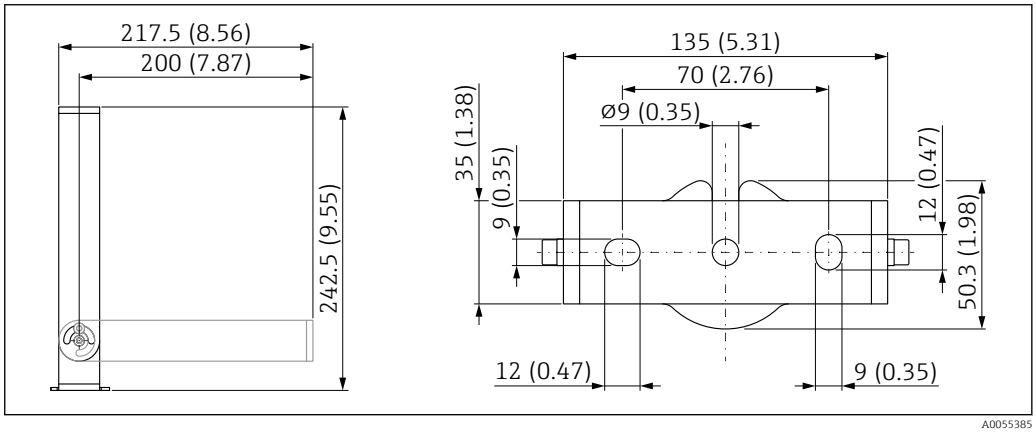

39 Dimensions of mounting bracket. Unit of measurement mm (in)

Consists of:
- 1 × mounting bracket, 316L (1.4404)
- 1 × angle bracket, 316L (1.4404)
- 3 × screws, A4
- 3 × securing disks, A4

Order number (G 1"/NPT 1")
71662421

Antenna end process connection G 1½"/NPT 1½"

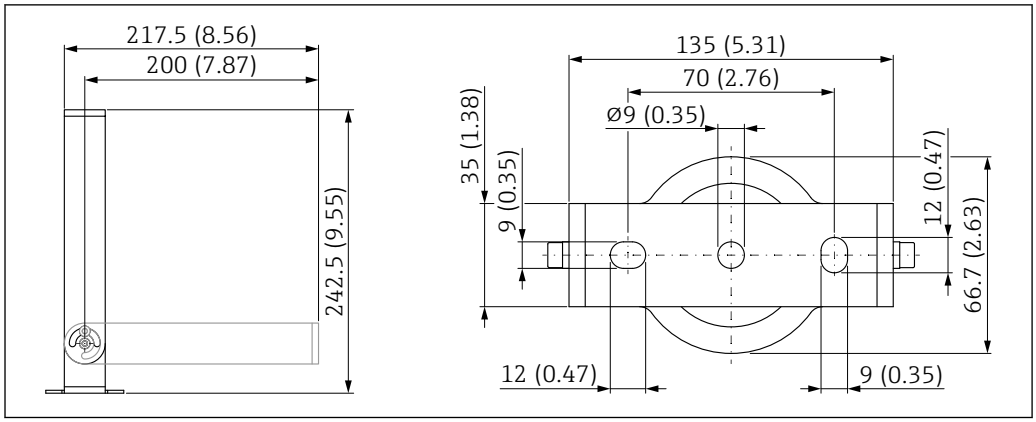

40 Dimensions of mounting bracket. Unit of measurement mm (in)

Consists of:
- 1 × mounting bracket, 316L (1.4404)
- 1 × angle bracket, 316L (1.4404)
- 3 × screws, A4
- 3 × securing disks, A4
- 1 × securing nut G 1½"

Order number (G 1½"/NPT 1½")
71662423

Angle bracket for wall mounting

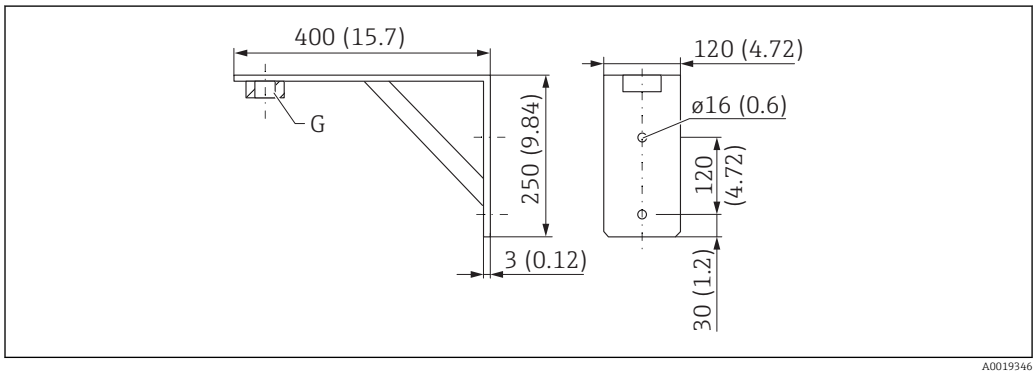

41 Dimensions of mounting bracket. Unit of measurement mm (in)

G Sensor connection in accordance with the product structure "Antenna end process connection"

Weight
3.4 kg (7.5 lb)

Material
316L (1.4404)

Order number for G 1½" process connection
71452324
Also suitable for MNPT 1½"

Order number for G 2" process connection
71452325
Also suitable for MNPT 2"

Cantilever with pivot

Installation type sensor cable entry process connection

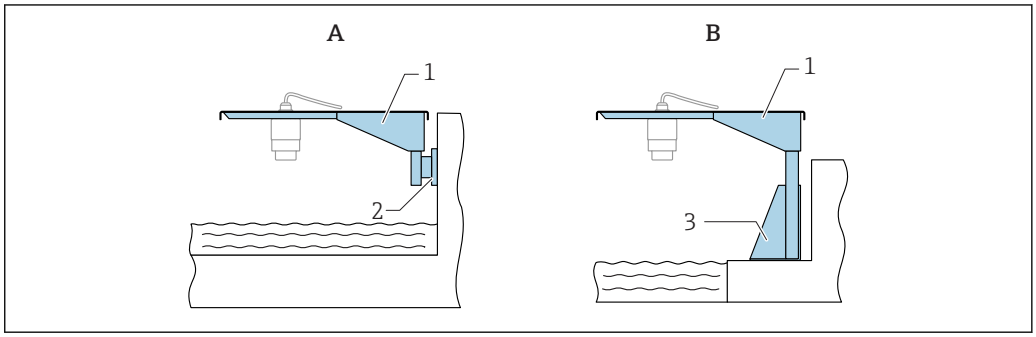

42 *Installation type sensor cable entry process connection*

A Installation with cantilever and wall bracket
B Installation with cantilever and mounting frame
1 Cantilever
2 Wall bracket
3 Mounting frame

500 mm cantilever with pivot, sensor cable entry process connection

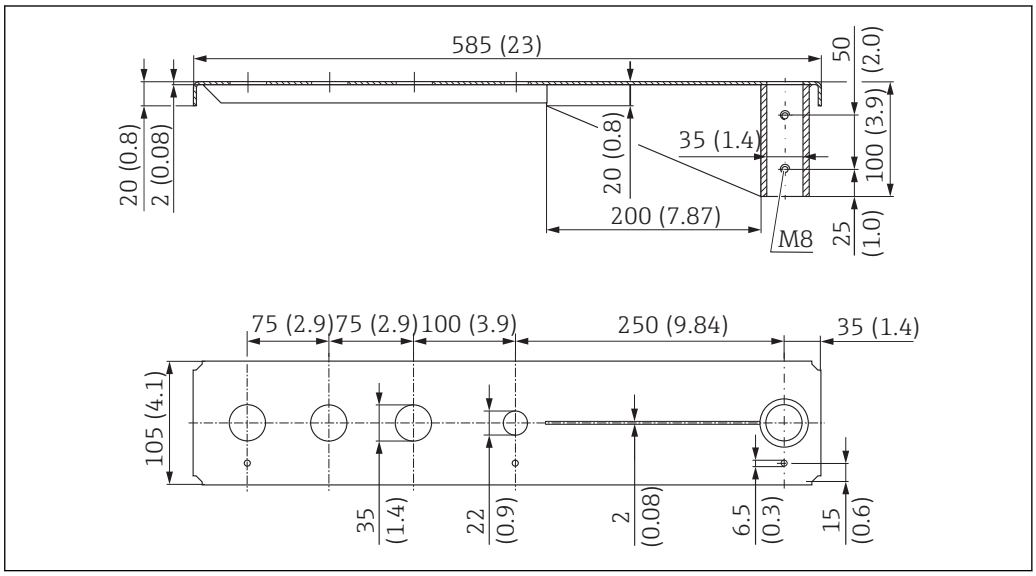

43 *Dimensions of 500 mm cantilever with pivot, for sensor cable entry process connection. Unit of measurement mm (in)*

Weight:
2.1 kg (4.63 lb)

Material
316L (1.4404)

Order number
71452315

- 35 mm (1.38 in) openings for all G 1" or MNPT 1" cable entry thread process connections
- 22 mm (0.87 in) opening can be used for any additional sensor
- Retaining screws are included in delivery

1 000 mm cantilever with pivot, sensor cable entry process connection

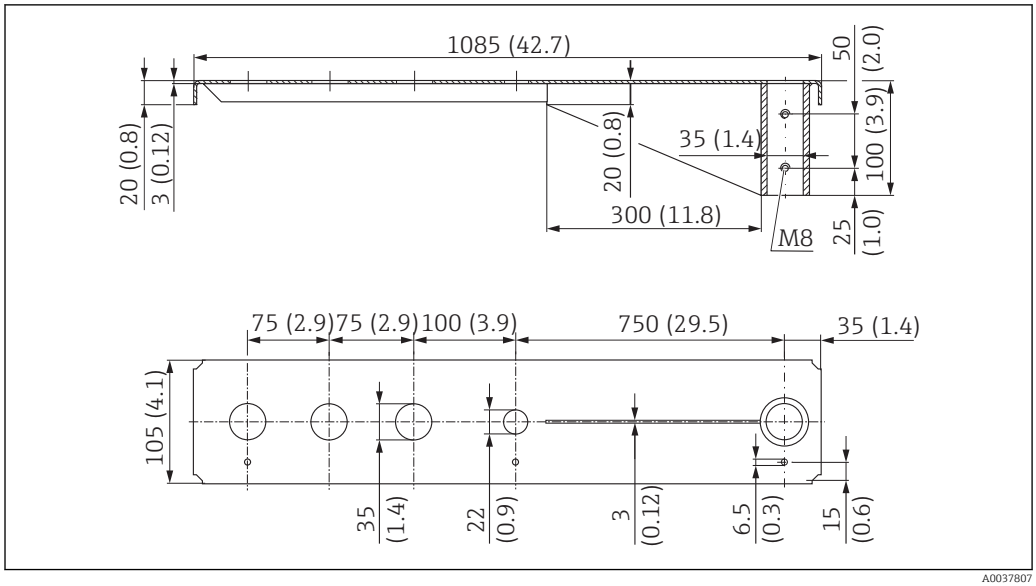

44 *Dimensions of 1 000 mm cantilever with pivot, for sensor cable entry process connection. Unit of measurement mm (in)*

Weight:
4.5 kg (9.92 lb)

Material
316L (1.4404)

Order number
71452316

- 35 mm (1.38 in) openings for all G 1" or MNPT 1" cable entry thread process connections
- 22 mm (0.87 in) opening can be used for any additional sensor
- Retaining screws are included in delivery

Installation type sensor antenna end process connection

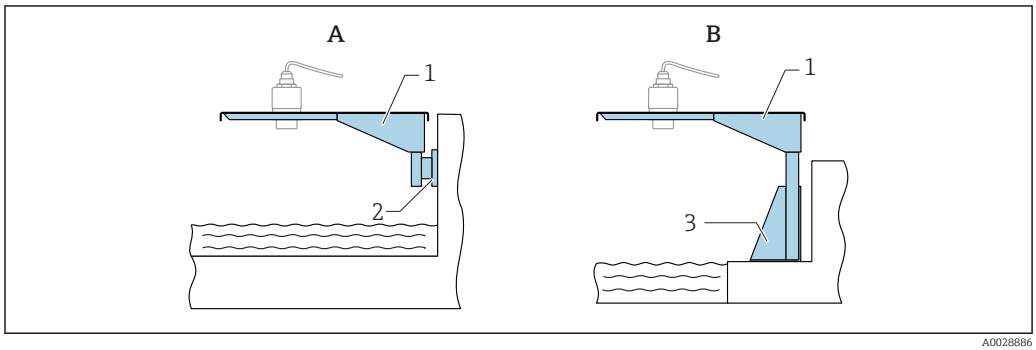

45 *Installation type sensor antenna end process connection*

A Installation with cantilever and wall bracket
B Installation with cantilever and mounting frame
1 Cantilever
2 Wall bracket
3 Mounting frame

500 mm cantilever with pivot, sensor antenna end process connection G 1½"

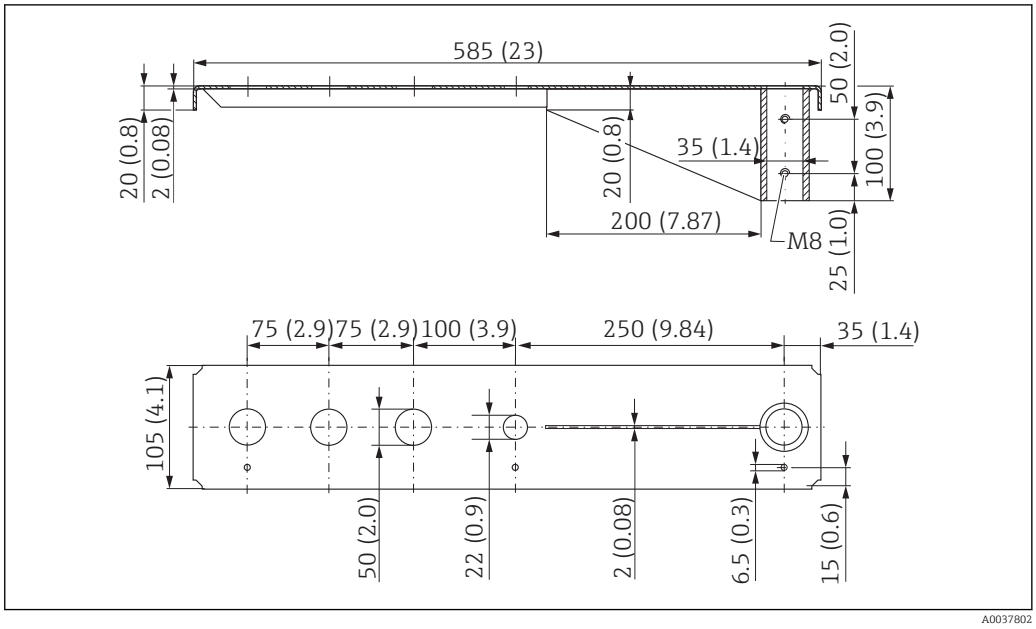

46 *Dimensions of 500 mm cantilever with pivot, for sensor antenna end process connection G 1½". Unit of measurement mm (in)*

Weight:
1.9 kg (4.19 lb)

Material
316L (1.4404)

Order code
71452318

- 50 mm (2.0 in) openings for all G 1½" or MNPT 1½" antenna end thread process connections
- 22 mm (0.87 in) opening can be used for an additional sensor
- Retaining screws are included in delivery

1 000 mm cantilever with pivot, sensor antenna end process connection G 1½"

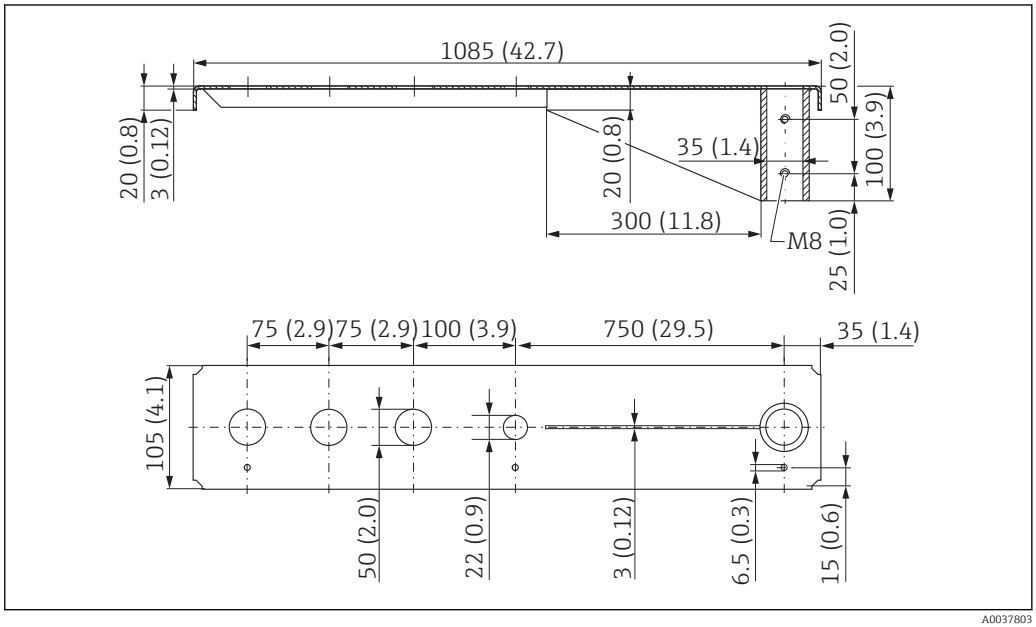

47 *Dimensions of 1 000 mm cantilever with pivot, for sensor antenna end process connection G 1½". Unit of measurement mm (in)*

Weight:
4.4 kg (9.7 lb)

Material
316L (1.4404)

Order code
71452319

- 50 mm (2.0 in) openings for all G 1½" or MNPT 1½" antenna end thread process connections
- 22 mm (0.87 in) opening can be used for an additional sensor
- Retaining screws are included in delivery

Mounting stand, 700 mm (27.6 in) for cantilever with pivot

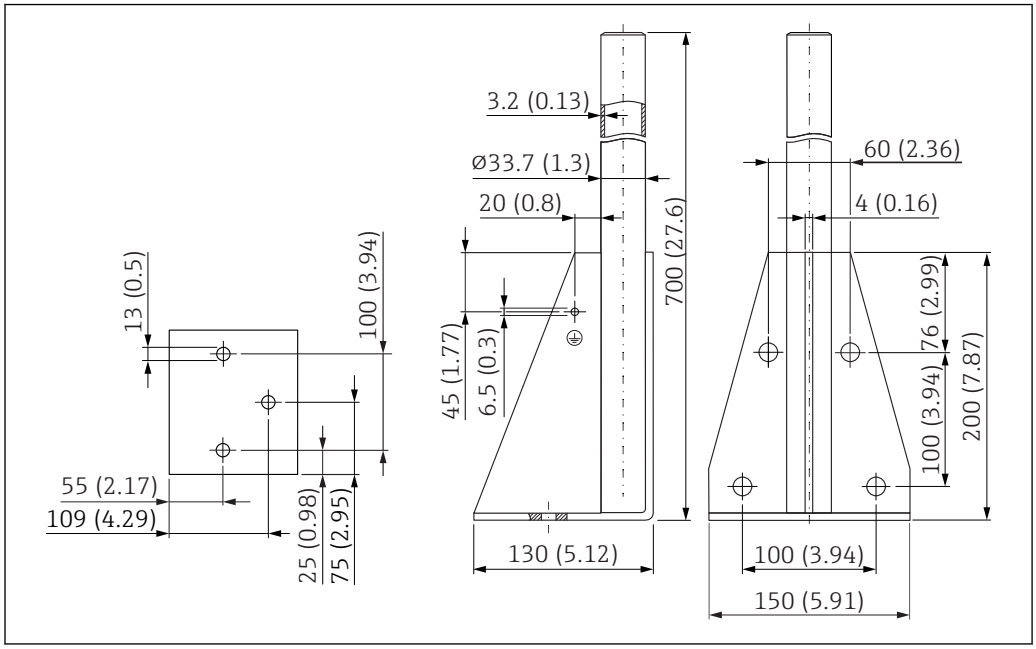

48 Dimensions. Unit of measurement mm (in)

Weight:
4.2 kg (9.26 lb)

Material
316L (1.4404)

Order code
71452327

Mounting stand, 1400 mm (55.1 in) for cantilever with pivot

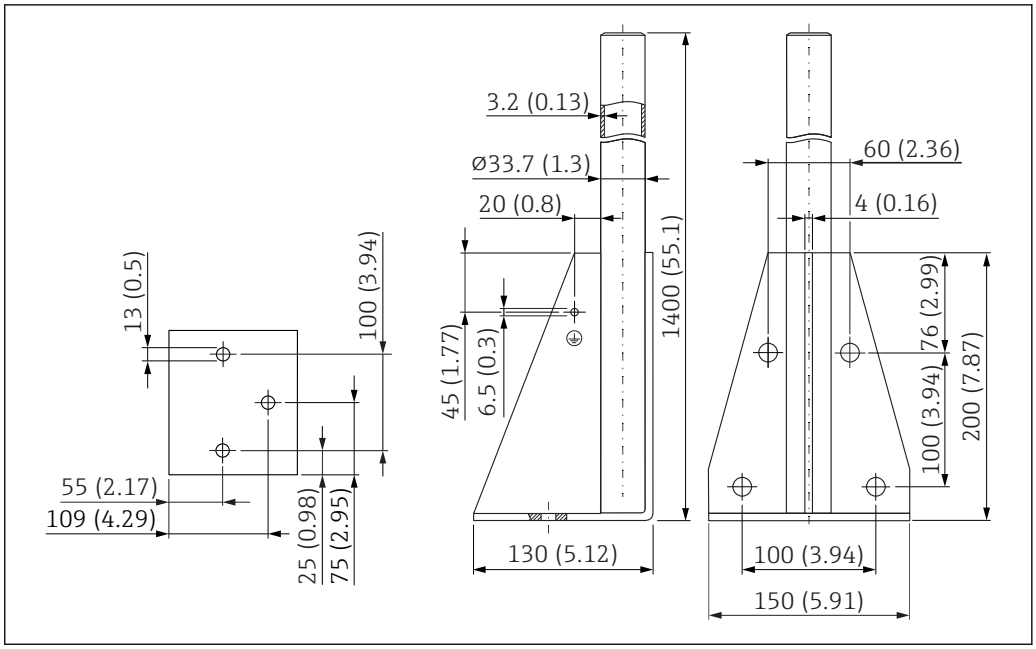

49 Dimensions. Unit of measurement mm (in)

Weight:
6 kg (13.23 lb)

Material
316L (1.4404)

Order code
71452326

Wall bracket for cantilever with pivot

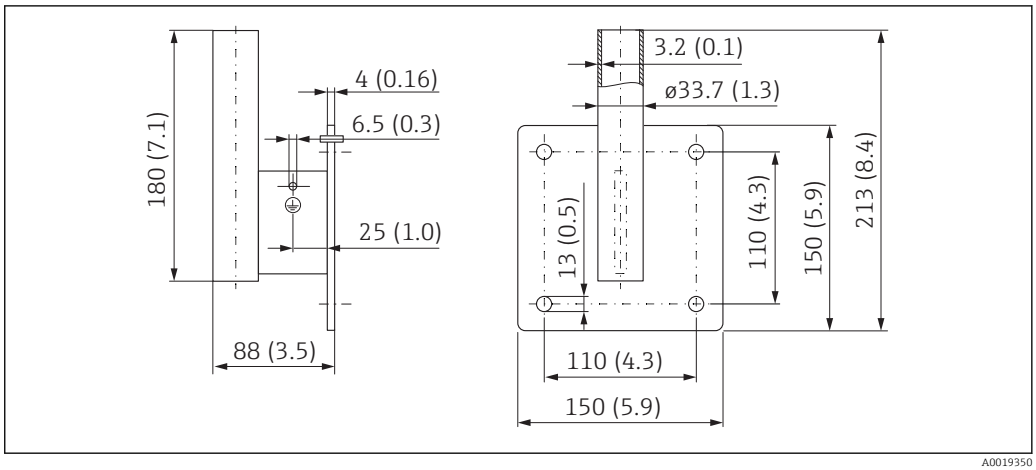

50 Dimensions of the wall bracket. Unit of measurement mm (in)

Weight
1.2 kg (2.65 lb)

Material
316L (1.4404)

Order number
71452323

Pivotable mounting bracket

The pivotable mounting holder is used, for example, to install the device in a manhole over a sewer channel.

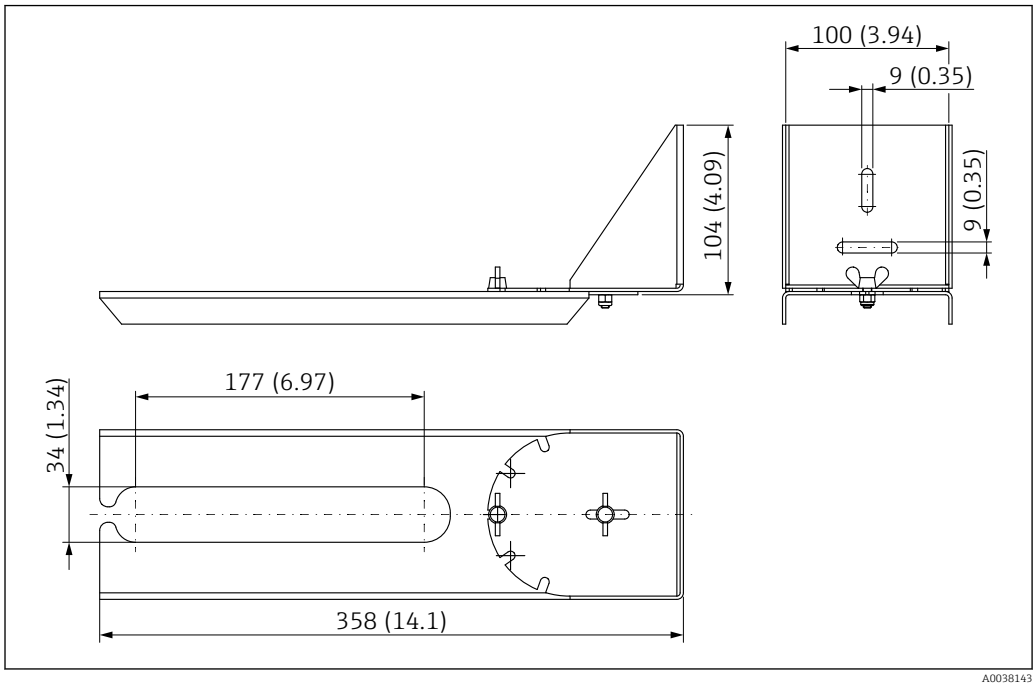

51 Dimensions of pivotable mounting bracket. Unit of measurement mm (in)

34 mm (1.34 in) openings for all G 1" or MNPT 1" cable entry thread process connections

Material
316L (1.4404)

Order code
71429910

FAU40 alignment unit

The alignment unit is used to optimally align the sensor with the bulk solids.

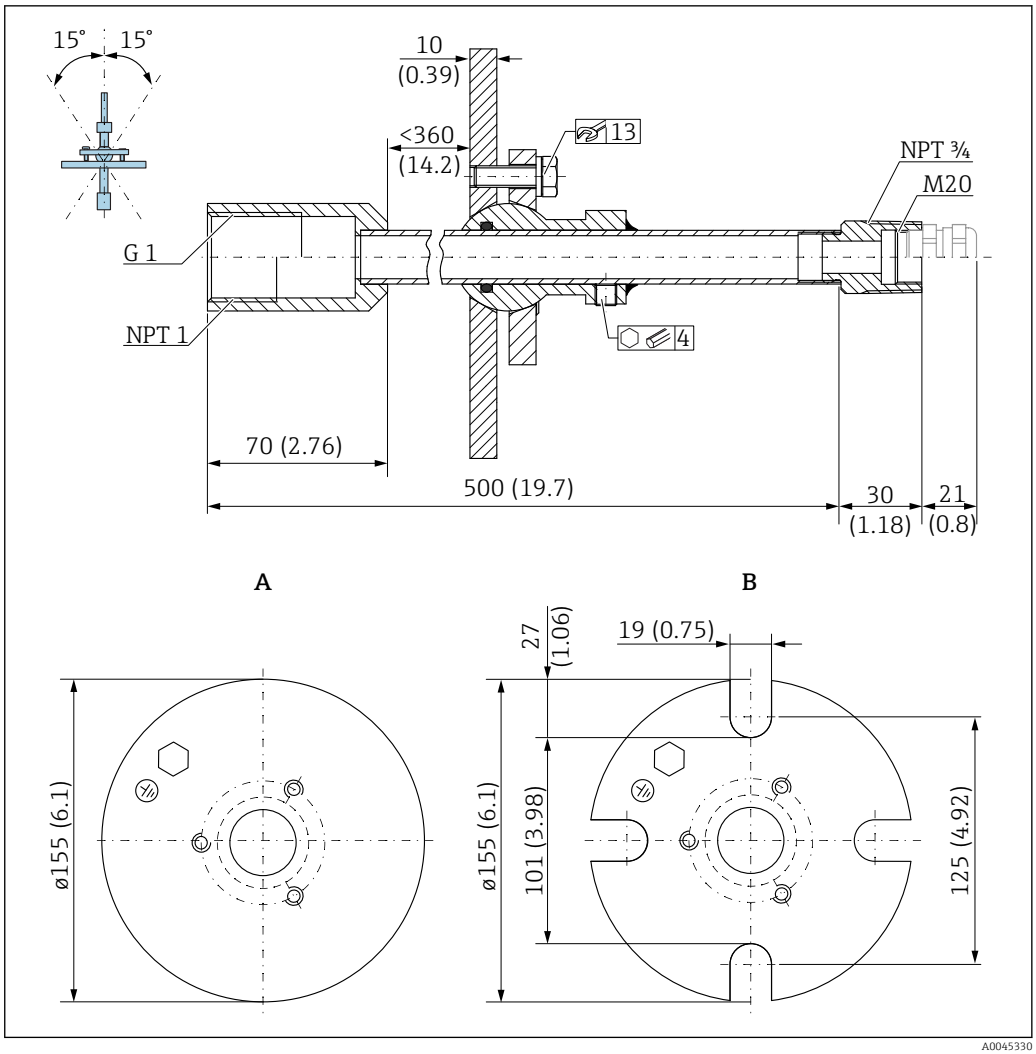

52 *Dimensions. Unit of measurement mm (in)*

A Welding flange
B UNI flange

Material
- Flange: 304
- Pipe: Steel, galvanized
- Cable gland: 304 or steel, galvanized

Order number
FAU40-##

For use in all G 1" or MNPT 1" cable entry thread process connections and connection cables max. dia. 10 mm (0.43 in), min. length 600 mm (23.6 in).

Technical Information TI00179F

UNI slip-on flange 3"/ DN80/80, PP

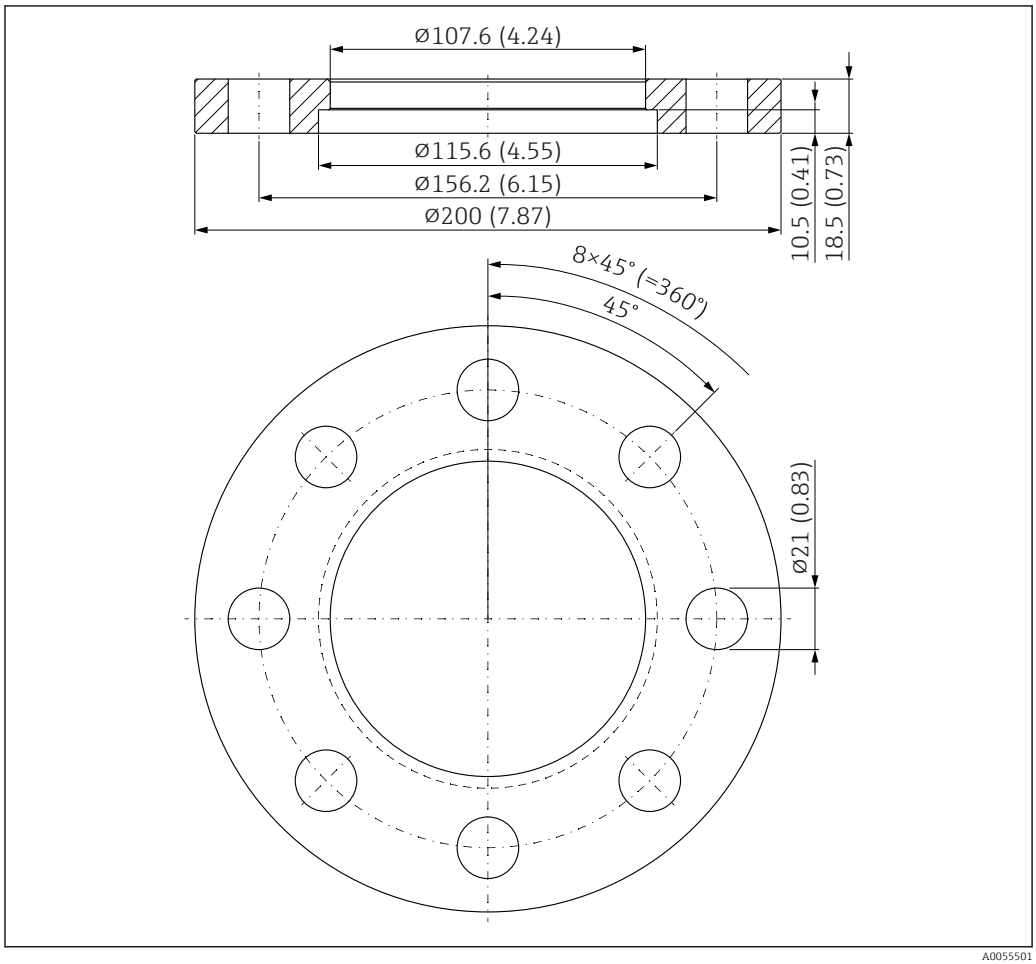

53 Dimensions of UNI slip-on flange 3"/DN80/80. Unit of measurement mm (in)

A Sensor connection in accordance with the product structure "Antenna end process connection; without; prepared for UNI slip-on flange > Accessories"

Material
PP

Order code
71162777

UNI slip-on flange 4"/ DN100/100, PP

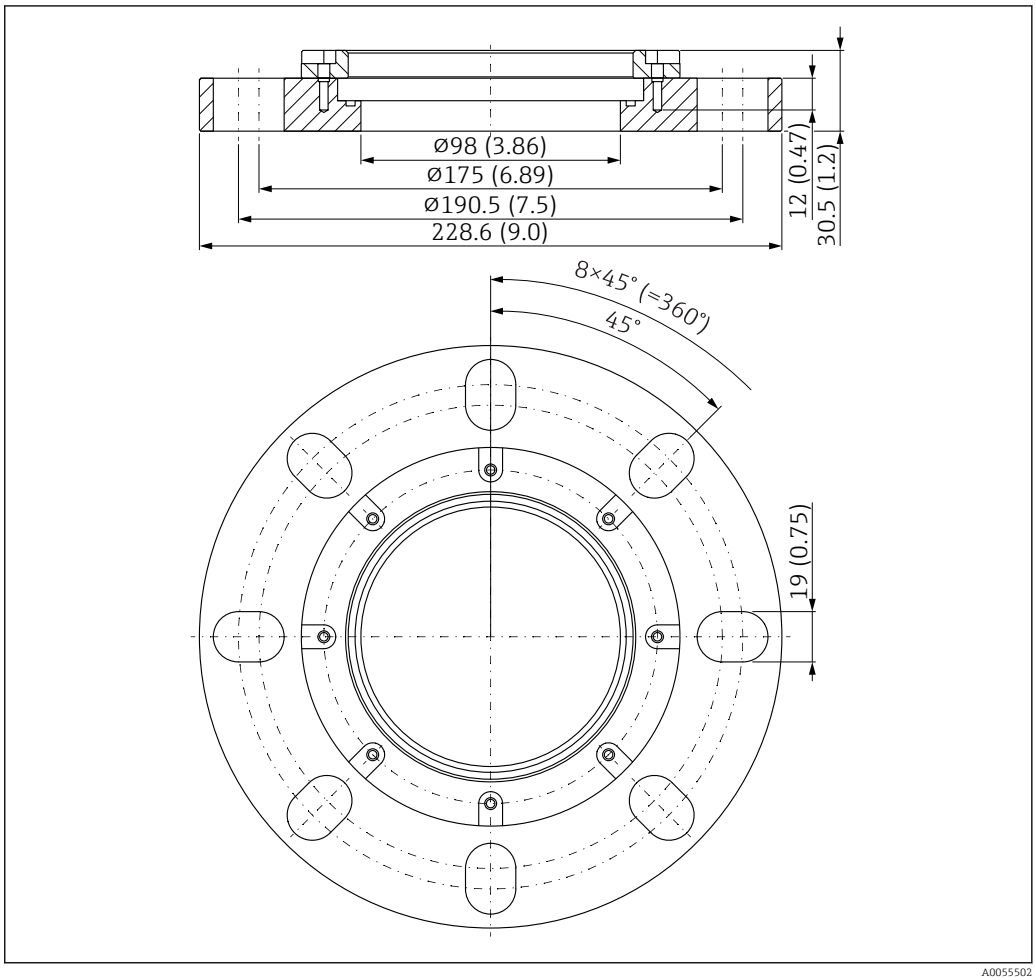

54 *Dimensions of UNI slip-on flange 4"/DN100/100. Unit of measurement mm (in)*

A Sensor connection in accordance with the product structure "Antenna end process connection; without; prepared for UNI slip-on flange > Accessories"

Material
PP

Order code
71162778

UNI slip-on flange 6"/ DN150/150, PP

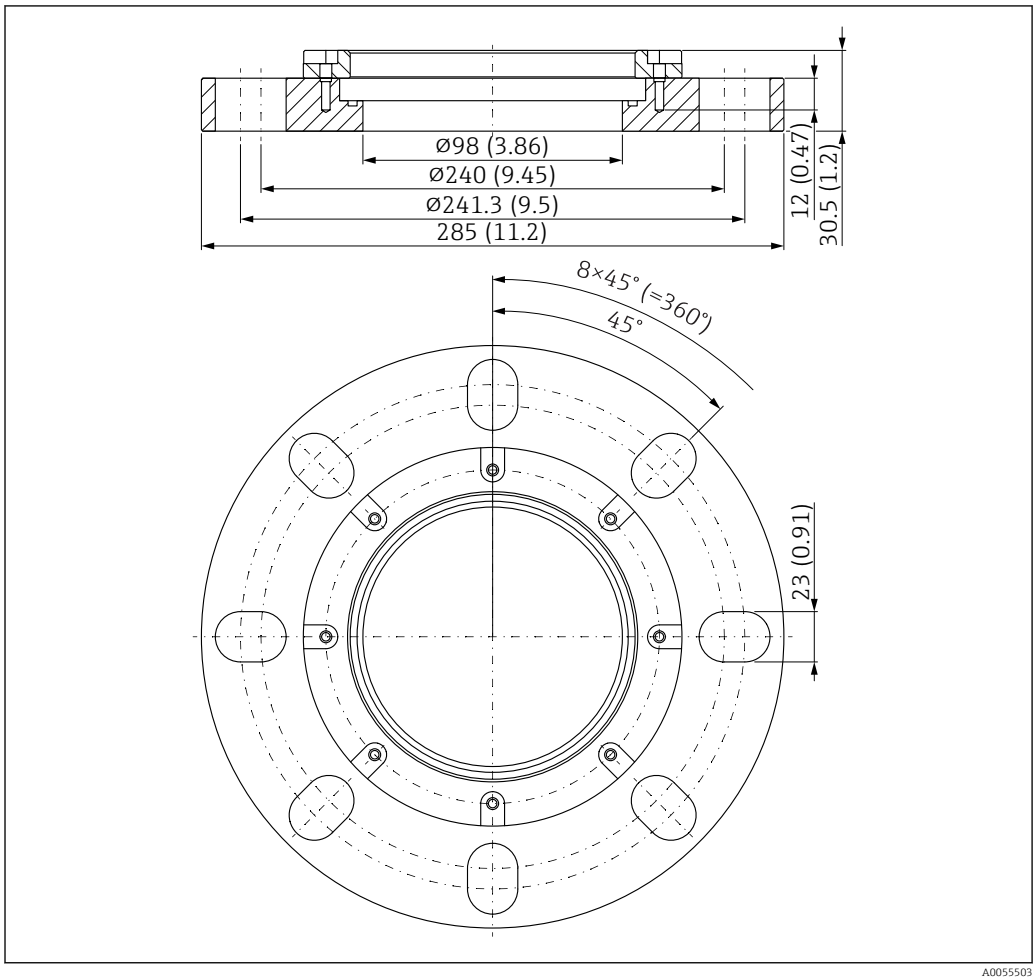

55 Dimensions of UNI slip-on flange 6"/DN150/150. Unit of measurement mm (in)

A Sensor connection in accordance with the product structure "Antenna end process connection; without; prepared for UNI slip-on flange > Accessories"

Material
PP

Order code
71162780

UNI flange 2"/DN50/50, PP

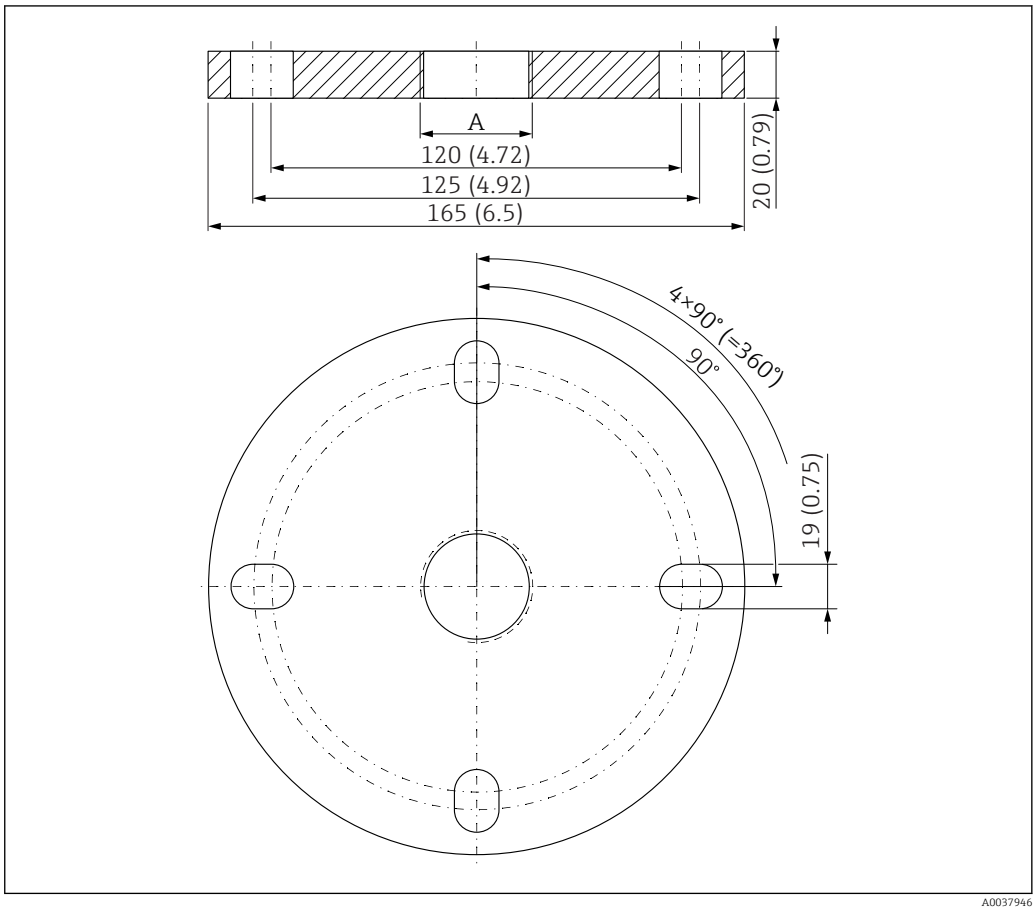

56 Dimensions of UNI flange 2"/DN50/50. Unit of measurement mm (in)

A Sensor connection in accordance with the product structure "Antenna end process connection"

Material
PP

Order code
FAX50-####

UNI flange 3"/DN80/80, PP

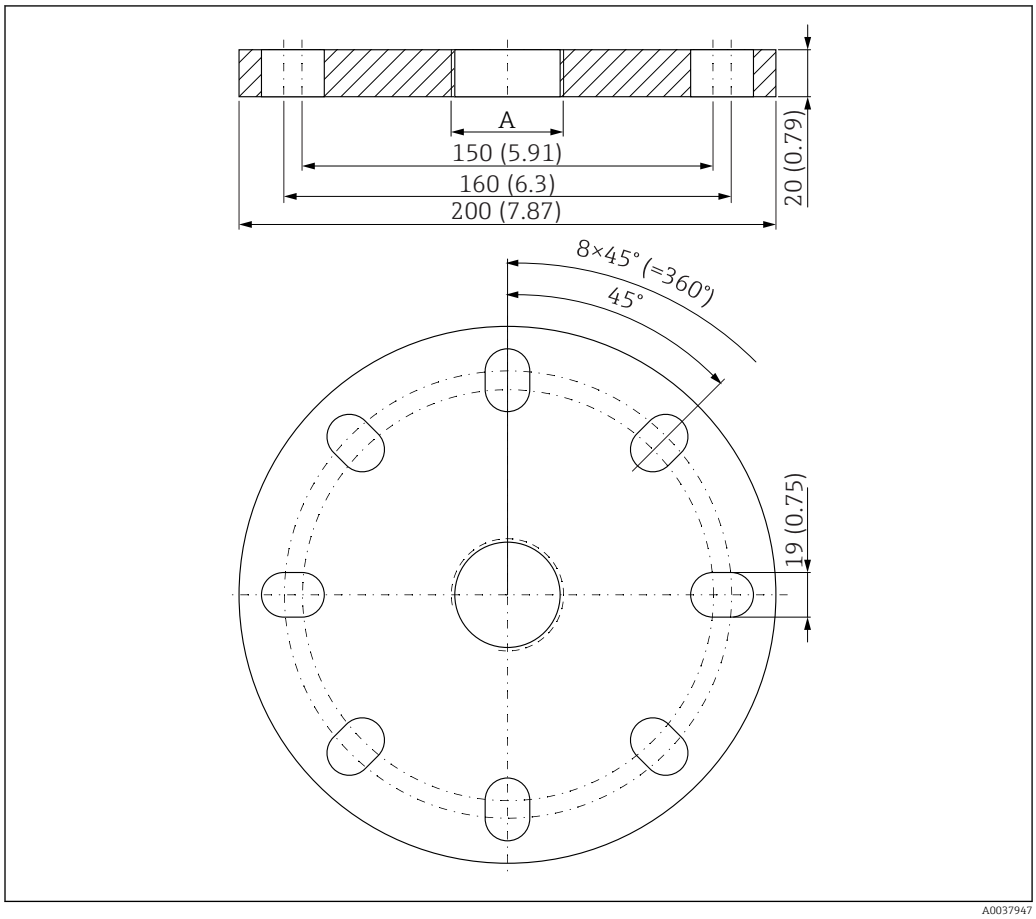

57 Dimensions of UNI flange 3"/DN80/80. Unit of measurement mm (in)

A Sensor connection in accordance with the product structure "Antenna end process connection" or "Cable entry process connection"

Material
PP

Order code
FAX50-####

UNI flange 4"/DN100/100, PP

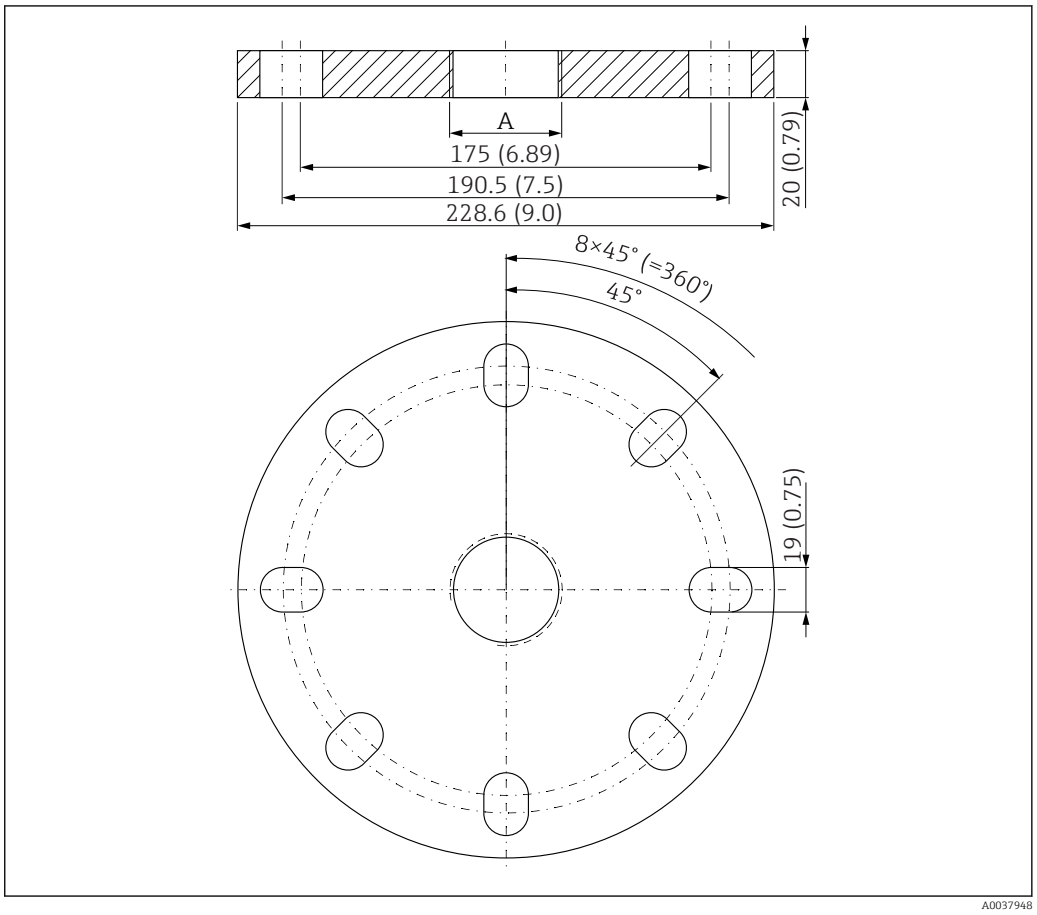

58 Dimensions of UNI flange 4"/DN100/100. Unit of measurement mm (in)

A Sensor connection in accordance with the product structure "Antenna end process connection" or "Cable entry process connection"

Material
PP

Order code
FAX50-####

Adjustable flange seal

The adjustable flange seal is used to align the sensor.

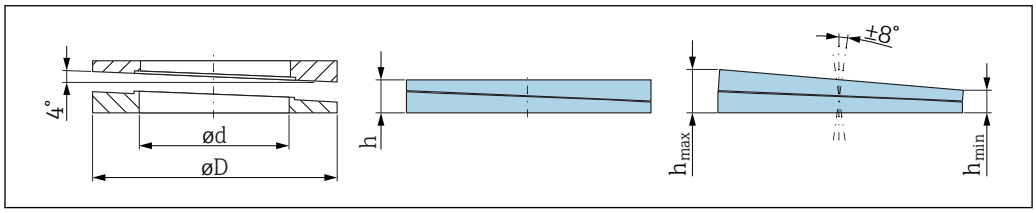

59 *Dimensions*

Technical data: version DN/JIS			
Order code	71074263	71074264	71074265
Compatible with	DN80 PN10/40	DN100 PN10/16	▪ DN150 PN10/16 ▪ JIS 10K 150A
Recommended screw length	100 mm (3.9 in)	100 mm (3.9 in)	110 mm (4.3 in)
Recommended screw size	M14	M14	M18
Material	EPDM		
Process pressure	−0.1 to 0.1 bar (−1.45 to 1.45 psi)		
Process temperature	−40 to +80 °C (−40 to +176 °F)		
D	142 mm (5.59 in)	162 mm (6.38 in)	218 mm (8.58 in)
d	89 mm (3.5 in)	115 mm (4.53 in)	169 mm (6.65 in)
h	22 mm (0.87 in)	23.5 mm (0.93 in)	26.5 mm (1.04 in)
h_{min}	14 mm (0.55 in)	14 mm (0.55 in)	14 mm (0.55 in)
h_{max}	30 mm (1.18 in)	33 mm (1.3 in)	39 mm (1.45 in)
Technical data: Version ASME/JIS			
Order code	71249070	71249072	71249073
Compatible with	▪ ASME 3" 150 lbs ▪ JIS 80A 10K	ASME 4" 150 lbs	ASME 6" 150 lbs
Recommended screw length	100 mm (3.9 in)	100 mm (3.9 in)	110 mm (4.3 in)
Recommended screw size	M14	M14	M18
Material	EPDM		
Process pressure	−0.1 to 0.1 bar (−1.45 to 1.45 psi)		
Process temperature	−40 to +80 °C (−40 to +176 °F)		
D	133 mm (5.2 in)	171 mm (6.7 in)	219 mm (8.6 in)
d	89 mm (3.5 in)	115 mm (4.53 in)	168 mm (6.6 in)
h	22 mm (0.87 in)	23.5 mm (0.93 in)	26.5 mm (1.04 in)
h_{min}	14 mm (0.55 in)	14 mm (0.55 in)	14 mm (0.55 in)
h_{max}	30 mm (1.18 in)	33 mm (1.3 in)	39 mm (1.45 in)

RIA15 in the field housing

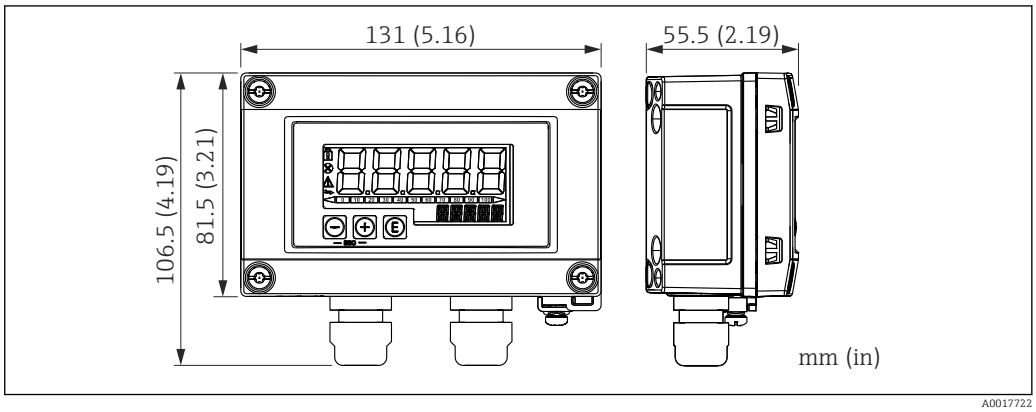

60 *Dimensions of RIA15 in the field housing. Unit of measurement mm (in)*

Older device versions before February 2025 can only be connected via the 4 to 20 mA current output.

The remote display RIA15 can be ordered with or without operation via the product structure "Accessory enclosed".

Field housing material: Plastic (PBT with steel fibers, antistatic)

Other housing versions are available via the RIA15 product structure.

Alternatively available as an accessory, for details see Technical Information TI01043K and Operating Instructions BA01170K

HART communication resistor

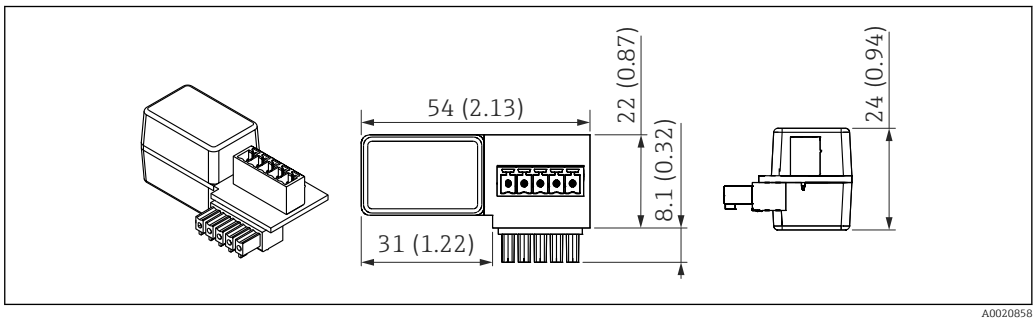

61 *Dimensions of HART communication resistor. Unit of measurement mm (in)*

The HART communication resistor is required for operation of the RIA15 and is supplied with "remote display RIA15, with operation via HART" when ordering.

Document Technical Information TI01043K and Operating Instructions BA01170K

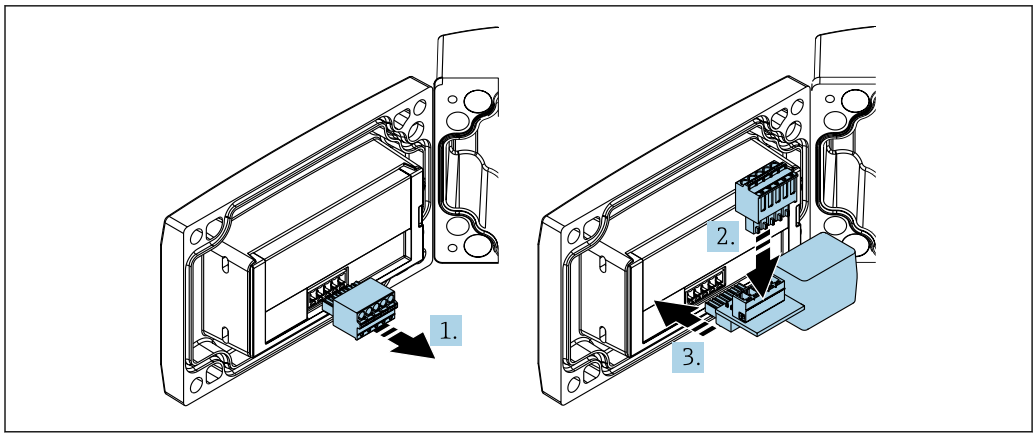

A0020844

In order to operate the RIA15, the HART communication resistor must be integrated.

1. Disconnect the plug-in terminal block.
2. Insert the terminal block into the slot provided on the HART communication resistor module.
3. Insert the HART communication resistor in the slot in the housing.

DeviceCare SFE100

Configuration tool for IO-Link, HART, PROFIBUS and FOUNDATION Fieldbusfield devices
DeviceCare is available for download free of charge at www.software-products.endress.com. You need to register in the Endress+Hauser software portal to download the application.

Technical Information TI01134S

FieldCare SFE500

FDT-based plant asset management tool
It can configure all intelligent field units in your system and helps you manage them. By using the status information, it is also a simple but effective way of checking their status and condition.

Technical Information TI00028S

Device Viewer

All the spare parts for the device, along with the order code, are listed in the *Device Viewer* (www.endress.com/deviceviewer).

Commubox FXA195 HART

For intrinsically safe HART communication with FieldCare via the USB interface

Technical Information TI00404F

RN22

Single or two-channel active barrier for safe electrical isolation of 4 to 20 mA standard signal circuits, HART transparent

Technical Information TI01515K and Operating Instructions BA02004K

RN42

Single-channel active barrier with wide-range power supply for safe electrical isolation of 4 to 20 mA standard signal circuits, HART transparent.

Technical Information TI01584K and Operating Instructions BA02090K

Field Xpert SMT70

Universal, high-performance tablet PC for device configuration in Ex Zone 2 and non-Ex areas

For details, see "Technical Information" TI01342S

Field Xpert SMT77

Universal, high-performance tablet PC for device configuration in Ex Zone 1 areas

For details, see "Technical Information" TI01418S

SmartBlue app	Mobile app for easy configuration of devices on site via Bluetooth® wireless technology.
RMA42	Digital process transmitter for monitoring and displaying analog measured values For details, see Technical Information TI00150R and Operating Instructions BA00287R

Documentation

For an overview of the scope of the associated Technical Documentation, refer to the following:
- *Device Viewer* (www.endress.com/deviceviewer): Enter the serial number from the nameplate
- *Endress+Hauser Operations app*: Enter serial number from nameplate or scan matrix code on nameplate.

Standard documentation	**Document type: Operating Instructions (BA)** Installation and initial commissioning – contains all the functions in the operating menu that are needed for a routine measuring task. Functions beyond this scope are not included. **Document type: Description of Device Parameters (GP)** The document is part of the Operating Instructions and serves as a reference for parameters, providing a detailed explanation of each individual parameter of the operating menu. **Document type: Brief Operating Instructions (KA)** Quick guide to the first measured value – includes all essential information from incoming acceptance to electrical connection. **Document type: Safety Instructions, certificates** Depending on the approval, safety instructions are supplied with the device, e.g. XA. This documentation is an integral part of the Operating Instructions. Information on the Safety Instructions (XA) that are relevant for the device is provided on the nameplate.
Supplementary device-dependent documentation	Additional documents are supplied depending on the device version ordered: Always comply strictly with the instructions in the supplementary documentation. The supplementary documentation is an integral part of the device documentation.

Registered trademarks

Apple®
Apple, the Apple logo, iPhone, and iPod touch are trademarks of Apple Inc., registered in the U.S. and other countries. App Store is a service mark of Apple Inc.

Android®
Android, Google Play and the Google Play logo are trademarks of Google Inc.

Bluetooth®
The *Bluetooth®* word mark and logos are registered trademarks owned by the Bluetooth SIG, Inc. and any use of such marks by Endress+Hauser is under license. Other trademarks and trade names are those of their respective owners.

HART®
Registered trademark of the FieldComm Group, Austin, Texas USA



www.addresses.endress.com

Endress+Hauser

People for Process Automation