

Enclosure - Explosion Proof
GRP **JUNCTION BOX**

Explosion Proof Junction Box > GRP
JB150 Series

Product overview

The JB150 junction box range has been approved for use in potentially explosive atmospheres and harsh environmental conditions.

Typical applications are Oil and Gas, On-shore and Offshore, Chemical, Petrochemical, Refineries & Marine locations etc.

The enclosures are machined from marine grade glass reinforced plastic (GRP) and are supplied with four pre-drilled conduit entries.

They have been designed to offer maximum space for cable termination with a choice of either an 8 or 10 way terminal block.

Features/Certifications

- Approved by ATEX, IECEx
- CQST (Available on request only)
- ATEX: II 2G **Exd IIC T4 - T6** (incorporating IIA & IIB)
- Zones 1, 2, 21 & 22
- Conforms to EN (IEC) 60079-0 EN (IEC) 60079-1 and EN54
- Dustproof & Weatherproof

JB150 Series > Ordering Information

Follow the chart (right) to generate your part code.

	Terminal Block	Cable Entry	Finish Colour
JB150 +	**08** = 8 Holes	**A** = M20	**RD** = Red
			YW = Yellow
			BU = Blue
	10 = 10 Holes	**B** = M25	**BL** = Black
			OR = Other

MODEL CONFIGURATOR (By using the table above, complete this box sequence to select your required junction box)

JB150			
	Terminal Block	Cable Entry	Finish Colour

Note: All customers orders will be confirmed in writing. Care should be taken that the correct code has been ordered as be-spoke manufactured products cannot be returned for exchange or credit later.

Kg 3.5 | **°C** -40+70 | **IP** 66 | INDUSTRIAL | MARINE | FIRE | GRP

APPROVALS and CONFORMITIES

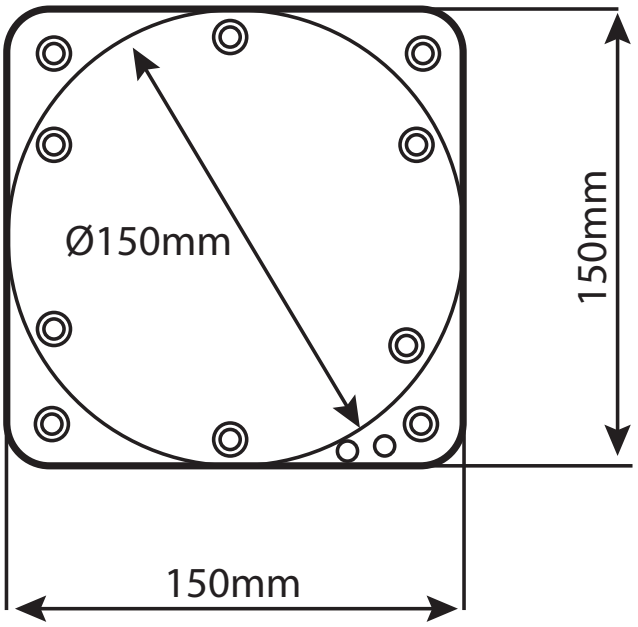

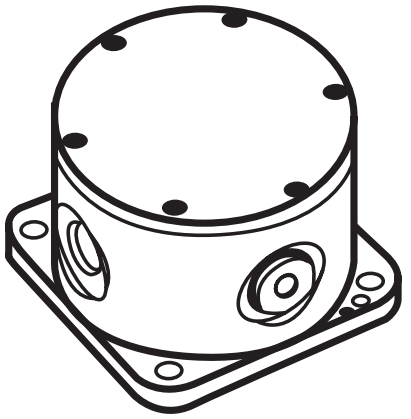

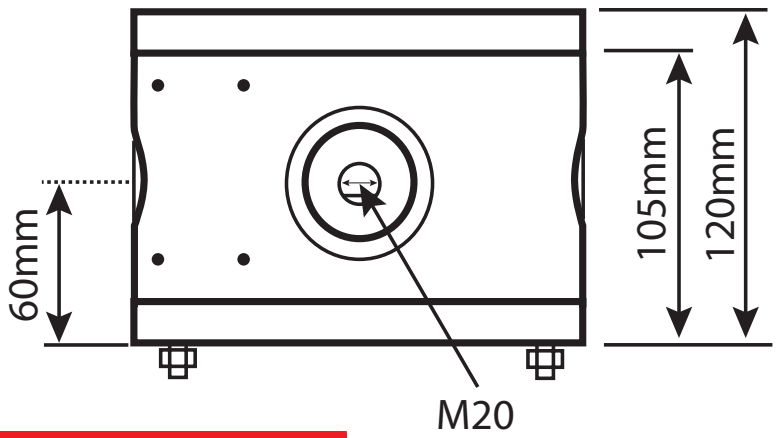

Explosion Proof Junction Box> GRP
JB150 Series

General Information

EX CODE:	Exd IIC T4 - T6
CERTIFICATION:	ATEX and IECEx
	CQST (Available on request only)
TYPE:	Junction Box

Mechanical Specifications

MATERIAL:	Enclosure: GRP (Glass Reinforced Plastic)
ENCLOSURE COLOUR:	Red (RAL3001), Yellow (RAL1003)
	Blue (RAL5005), Black (RAL9004)
AMBIENT TEMPERATURE:	-40 to +70
HUMIDITY:	≤ 95% RH
WEIGHT:	3.5 Kg / 7.7 lb
DIMENSIONS:	Width/Length: 125mm / 4.92" Height: 90mm / 3.54"
INGRESS PROTECTION:	IP 66

Electrical Specifications

TERMINATION:	Accepts upto ≤ 2.5mm^2 incorporating rising clamp protectors
CABLE ENTRY:	4 x M20 or M25
	For 1/2" or 3/4"NPT requirements, male/female adapter glands are available. Contact sales dept for further part codes.

Accessories

50200:	M20 E1EX Nickel Plated Brass Gland (Multi Armour Cone) Atex Cat 2 &3, EExde IIC 2 GD Cable ID 11 - 15.5mm OD 14.5 - 21mm Gland for Multi Armoured Cable *
50201:	M20 A2EX Nickel Plated Brass Gland Atex Cat 2 & 3, EExde IIC 2 GD Cable OD 11 - 15.5mm Gland for Unarmoured Cable *
50202:	M20 E1EX-QS Nickel Plated Brass Gland (Ex d IIC, Ex e IIC, Ex nR IIC, Ex tb IIIC) Cable OD 14.5 - 20.5mm Barrier Gland for Steel and Aluminium Armoured Cable *
50203:	M20 A2EX Quick Stop Nickel Plated Brass Gland (Ex d IIC, Ex nR IIC, Ex tb IIC) Cable OD 9 - 15mm Barrier Gland for Unarmoured Cable *
50204:	M20 Nickel Plated Brass Stopping Plug Atex EExde I/IIC Standard M20 Blanking Plug
50221:	Epoxy Minute Adhesive 24m/l tube One tube sufficient for five barrier glands
* 25mm	Thread length for GRP products
Note:	M25 options available for the above