OY454S

Safety light curtain

OYA1810-30-4-12-P-1

For 8-pole sockets the core colours are not standardised.
Please note the wiring of the sensor and the sockets (see data sheet).

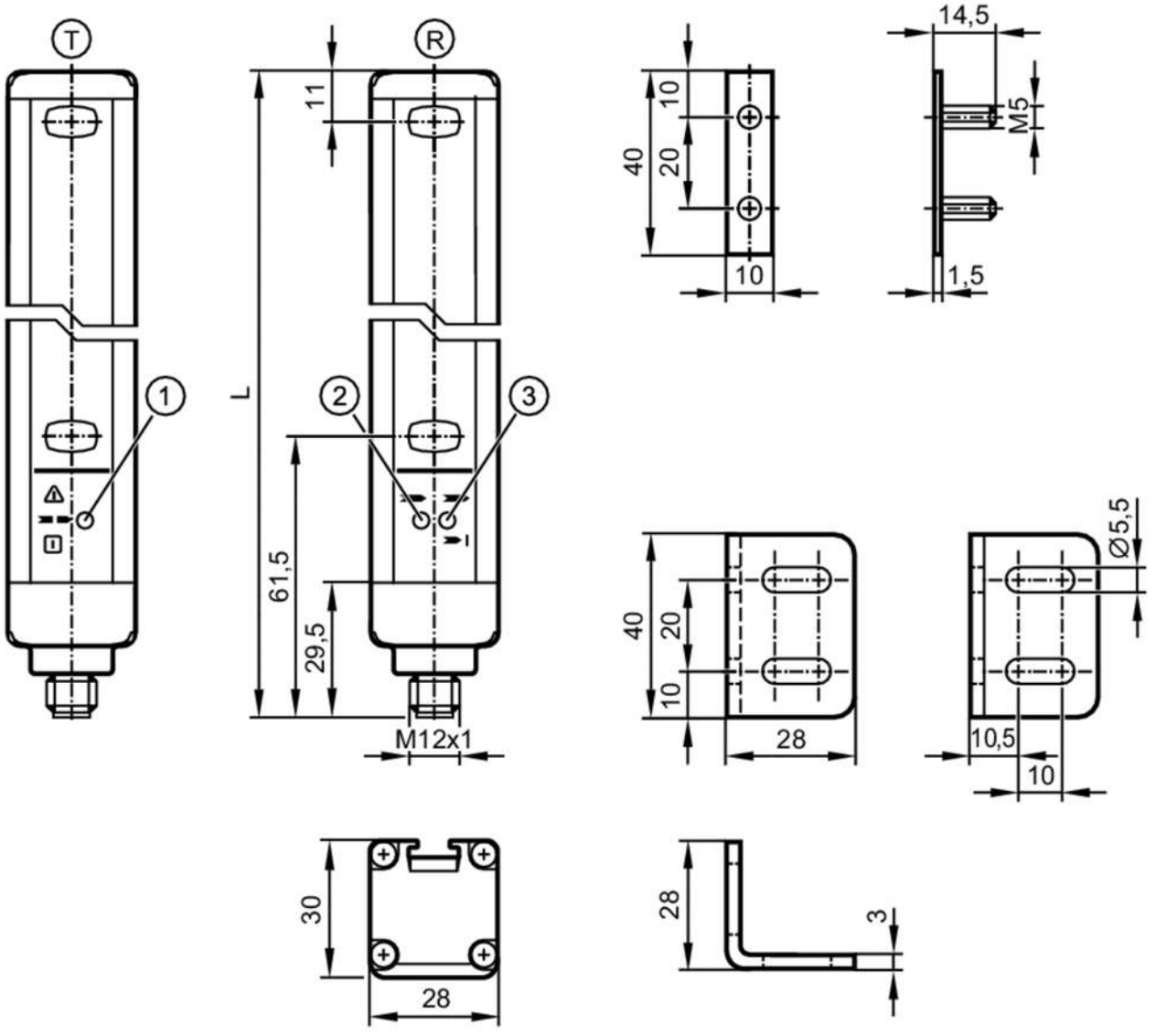

T	transmitter
R	receiver
1	LED three-colour red / green / orange
2	LED yellow
3	LED 2-colour red/green

Product characteristics	
Type of light	infrared light
Electrical design	PNP
Protection	IP 65; IP 67
Application	
Protective function	access prevention hand protection

OY454S

Safety light curtain

OYA1810-30-4-12-P-1

Electrical data			
Operating voltage tolerance	[%]	20	
Operating voltage	[V]	24 DC	
Protection class		III	
Reverse polarity protection		yes	
Power-on delay time	[s]	< 2	
Type of light		infrared light	
Wave length	[nm]	950	
Receiver			
Current consumption	[mA]	83	
Transmitter			
Current consumption	[mA]	42	
Outputs			
Electrical design		PNP	
Number of OSSD outputs		2	
Max. current load per OSSD output	[mA]	400; (24 V)	
Short-circuit protection		yes	
Detection zone			
Protected area height	[mm]	1810	
Resolution (detection capacity d)	[mm]	30	
Protection area width (low light intensity)	[m]	0...4	
Protection area width (high light intensity)	[m]	3...12	
Response times			
Response time	[ms]	22	
Operating conditions			
Applications		class C to EN 60654-1 weatherproof application	
Ambient temperature	[°C]	-10...55	
Storage temperature	[°C]	-20...70	
Max. relative air humidity	[%]	95	
Protection		IP 65; IP 67	
Tests / approvals			
EMC		IEC 61496-1	
Shock resistance		IEC 61496-1	
Vibration resistance		IEC 61496-1	
UL approval		Ta	-20...55 °C
		File number UL	E329729
Safety classification			
ESPE type (IEC 61496-1)		4	
Complies with the requirements		ISO 13849-1: 2015 category 4, PL e	
		IEC 61508 SIL 3	
		IEC 62061 SIL 3	

OY454S

Safety light curtain

OYA1810-30-4-12-P-1

Mission time TM	[h]	175200
PFH	[1/h]	2,02E-08

Mechanical data

Weight	[g]	5810
Dimensions	[mm]	1863 x 28 x 30
Materials		housing: aluminium; front pane: PC
Length L	[mm]	1863

Displays / operating elements

Display	transmitter	1 x LED
	receiver	2 x LED

Accessories

Items supplied	mounting bracket: 6
	slot nuts: 6
	Nuts

Remarks

Pack quantity	1 pcs.

Electrical connection - receiver

Connector: 1 x M12; coding: A; Maximum cable length: 100 m; for wire cross-section 0.34 mm²



Connection

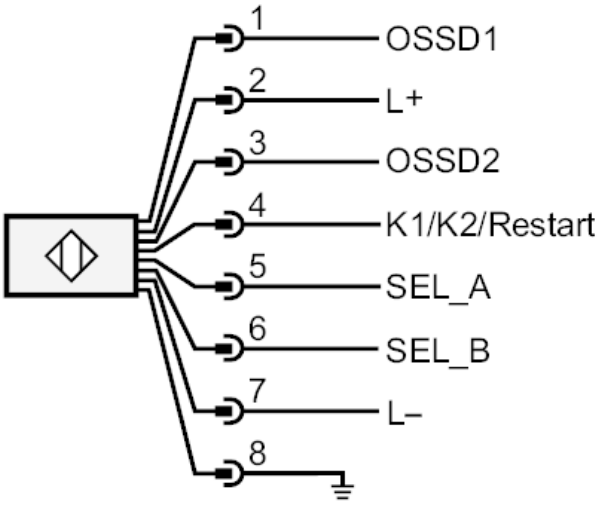

OY454S

Safety light curtain

OYA1810-30-4-12-P-1

Electrical connection - transmitter

Connector: 1 x M12; coding: A

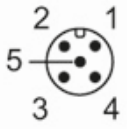

Connection

