Compensating coupling PM7, series CM2

1827001631

AVENTICS Flexible couplings



Technical data

Industry	Industrial
For series	to mount on cylinder PRA, TRB, CCL-IS/-IC, CCI, SSI, KPZ, 167, CVI, RPC, ITS with plate
For series	PRA TRB CCL-IS CCL-IC CCI SSI KPZ RPC 167
Thread size	M16x1,5
Weight	0.9 kg

Material

Housing material	Steel, chrome-plated
Surface housing	galvanized
Part No.	1827001631

Compensating coupling PM7, series CM2

1827001631

Dimensions

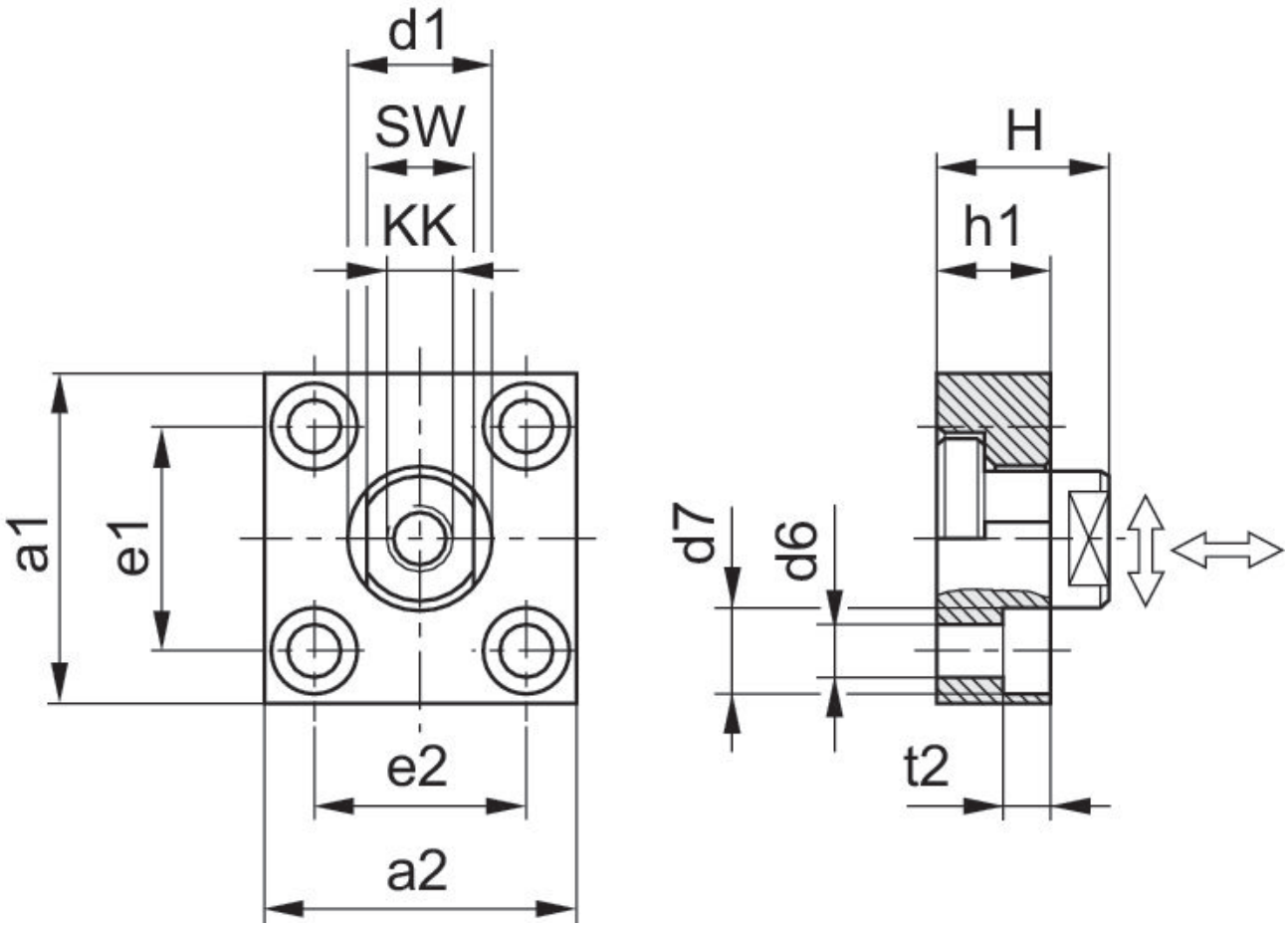

KK	Part No.	a1	a2	d1 h11	d6 H13	d7 H13	e1 H13	e2	h1
M10x1.25	1827001629	60	37	20	6.6	11	36 ±0,15	23 ±0,15	15
M12x1.25	1827001630	60	56	25	9	15	42 ±0,2	38 ±0,2	20
M16x1.5	1827001631	80	80	30	11	18	58 ±0,2	58 ±0,2	20
M20x1.5	1827001632	90	90	40	14	20	65 ±0,3	65 ±0,3	20
M27x2	1827001633	90	90	40	14	20	65 ±0,3	65 ±0,3	20
M36x2	1827001634	125	125	60	18	26	90 ±0,3	90 ±0,3	30

KK	t2	H	SW	Tightening torque for the coupling pin Ma ± 5%	Axial play min./max.	Radial play min./max.
M10x1.25	7	24	17	17 Nm	0,4 - 0,8 mm	1,9 - 2,3 mm
M12x1.25	9	30	19	29 Nm	0,4 - 0,8 mm	1,9 - 2,3 mm
M16x1.5	11	32	24	71 Nm	0,4 - 0,8 mm	1,9 - 2,3 mm
M20x1.5	13	35	36	138 Nm	0,4 - 0,8 mm	1,9 - 2,3 mm
M27x2	13	35	36	350 Nm	0,4 - 20,31 mm	1,9 - 2,3 mm
M36x2	17	55	50	1080 Nm	0,4 - 0,95 mm	2,8 - 3,4 mm