Mounting plate, Series NL4-MBR-...-W01

- Steel



Ambient temperature min./max.	-40 ... 60 °C
Weight	0,1 kg

Technical data

Part No.
1821336007

Scope of delivery incl. mounting screws

Technical information

Material	
Housing	Steel, galvanized

Dimensions

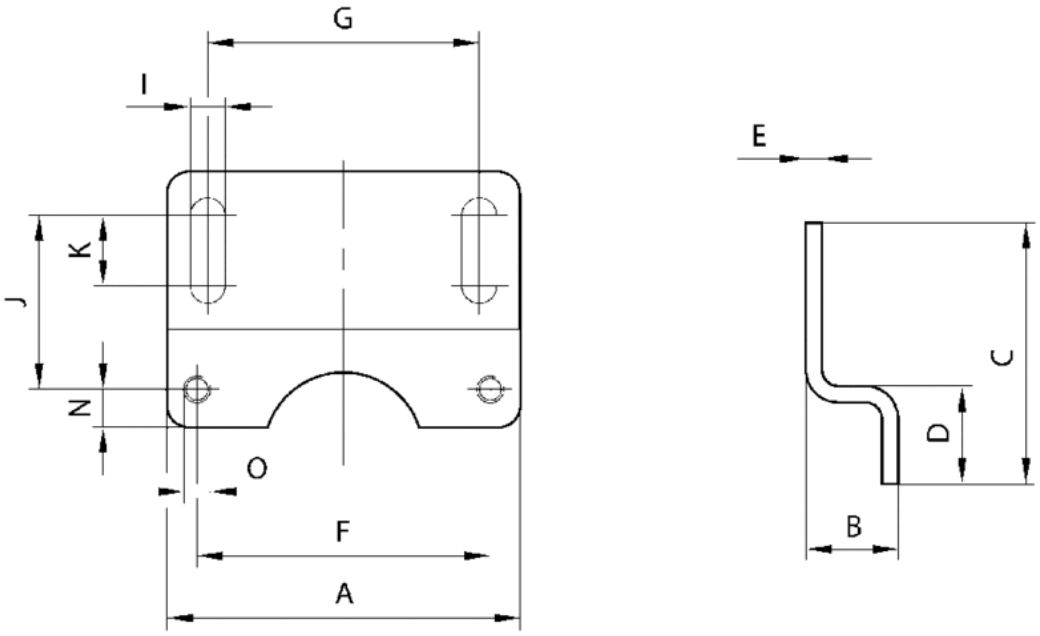

Dimensions

Part No.	A	B	C	D	E	F	G	I	J	K	N	O
1821336007	65	20	48	18	3	54	50	6.4	33	13	7	M5