Compact magnetic cylinders - Series 32

Product code: 32R2A063A060

Datasheet creation date: 19/05/2026 11:04

Check the most updated document online click here



TECHNICAL DATA

Series	32
Version	R=non-rotating with flange only double acting
Operation	2=double-acting
Materials	A = anodized aluminium body, end blocks and piston,
Diameter (mm)	63
Construction	A = standard
Cylinder Stroke (mm)	60
Seal options	= standard
Rod length (mm)	0
Rod lenght 2 (mm)	0
Certifications	= standard

Products designed for industrial applications. General terms and conditions for sale are available on www.camozzi.com.
This document contains a brief description of the products offered by Camozzi Automation at time of publication.
For more complete and up to date information about the Camozzi Automation product range, please refer to our online catalogue at https://shop.camozzi.com

Compact magnetic cylinders - Series 32

Product code: 32R2A063A060

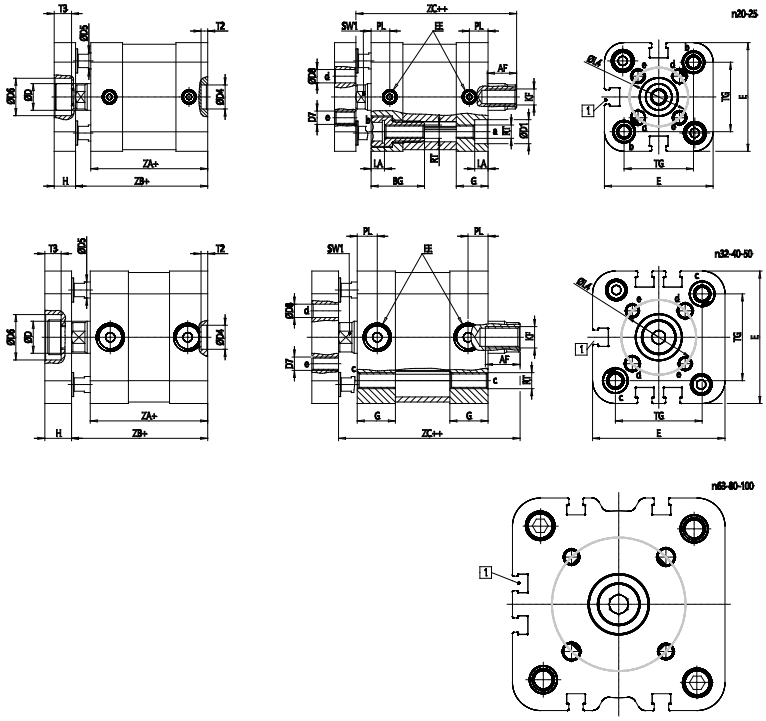

DIMENSIONS

A (mm)	22
AF (mm)	16
BG (mm)	0.0
G (mm)	14
Ø (mm)	16
Ø (mm)	0
D4 (mm)	12
D5 (mm)	10
D6 (mm)	22
D7	M6
D8 (mm)	6
E (mm)	79.6
EE	G1\8
H (mm)	12
KF	M10
KK	M12x1,25
LA (mm)	0
L4 (mm)	50
PL (mm)	7.6
RT	M8
SW1 (mm)	13
T2 (mm)	4
T3 (mm)	7

TG (mm)	56.5
ZA (mm)	49.0
ZB (mm)	57.0
ZC (mm)	65

Products designed for industrial applications. General terms and conditions for sale are available on www.camozzi.com.
This document contains a brief description of the products offered by Camozzi Automation at time of publication.
For more complete and up to date information about the Camozzi Automation product range, please refer to our online catalogue at https://shop.camozzi.com