Brand of NTN corporation

Technical data

UCP205

Bearing units



Grey cast housing, radial insert ball bearing with socket set screws,seal with slinger

KIT CONTENT

UC205G2, P205

VISUAL (S)

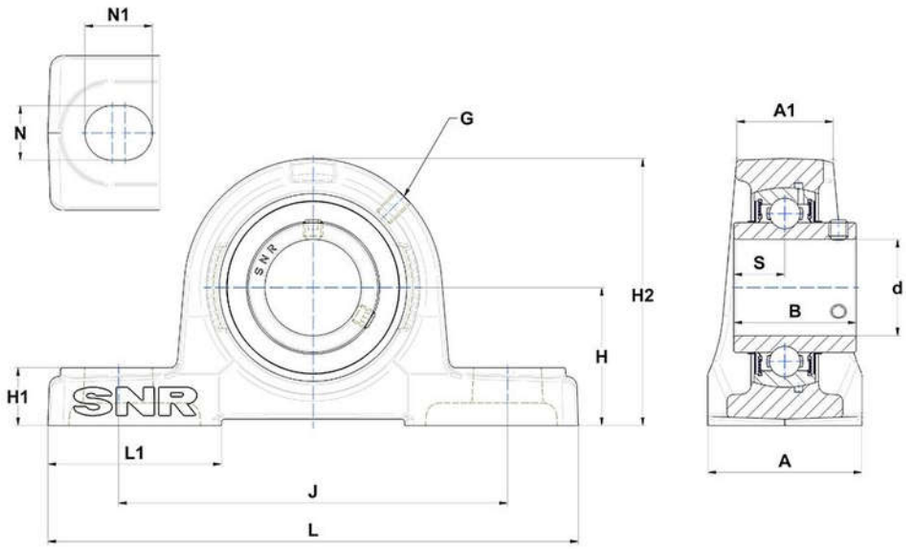

PRODUCT DEFINITION

Brand	SNR
A - Housing width	38 mm
A1 - Housing top width	26 mm
B - Width of Inner Ring	34 mm
d - Shaft diameter	25 mm
G - Grease fitting	M6x1

PRODUCT DEFINITION	
H - Distance mounting base to centerline spheric. seating diam.	36,5 mm
H1 - Housing foot height	16 mm
H2 - Housing height	70 mm
J - Mounting holes distance	105 mm
L - Housing length	140 mm
L1 - Housing foot length	42 mm
N - Mounting hole dimension	13 mm
N1 - Mounting hole length	19 mm
S - Distance front side/bearing centre	14,3 mm

PRODUCT PERFORMANCE	
C - Dynamic load rating	14 kN
C0 - Static load rating	7,88 kN
Operating temperature min.	-20 °C
Operating temperature max.	100 °C

OTHER FEATURES	
Mass	0,81 kg
Recommended tightening torque for set screw	5.5 N-m