**1.30.240.005/1608**

# RAFIX 22 QR, illuminated pushbutton with protective cap, flat bezel, round collar, momentary contact function, frontring light gray, bezel blue



## fields of application

- Measurement-control-regulation
- Electrical engineering
- Mechanical and system engineering
- Vehicle construction

## special features

- Transparent orifice plates, illuminable
- A protective cap enables use under difficult environmental conditions
- Protection class at the front according to DIN EN 20653: P69K at 23° water temperature
- Robust - also suitable for operation with gloves
- Firmly molded collar seal, cannot twist or be lost during installation.
- 1-person mounting: the element is clamped by the seal in the mounting hole and can then be screwed from behind.
- Installation diameter 22.3 mm
- Separate switching elements required
- Close mounting of actuators possible (min. 30 x 50 mm), as wiring is axial from behind
- Switching elements with silver contacts (max. 400 V) or gold contacts (max. 35 V / 100 mA)
- Connection types switching elements: cage clamp, screw connection or plug-in connection

The information in this data sheet only contains general descriptions and / or performance features, which may not apply precisely as described to the respective application, and which my change due to further product enhancements. The technical data, illustrations and other information about our products are the mere results of individual technical testing. These descriptions and other product features are only binding if they expressly agreed upon at the time of the conclusion of a binding contract. In all other cases, we reserve the right to make technical changes as well as changes of availability. Pictures and other graphic illustrations are approximations only. All product names may be trademarks or brand names of the RAFI Group or any other sub-supplier of RAFI. The use of such by any third parties for their own purposes may infringe the rights of the respective entity holding those rights.


**RAFI GmbH & Co. KG**

Ravensburger Str. 128-134
88276 Berg / Ravensburg
Germany
www.rafi-group.com,
info.headquarters@rafi-group.com

## description

RAFIX control units are modular units consisting of several parts. In the RAFIX 22 QR family, they always consist of an actuating element, coupling, and switching element, or of a light attachment, coupling, and lamp socket. For assembly, the switching elements and lamp holders are first snapped into the coupling. Then this unit is snapped onto the actuating element or the signal lamp. To release, a bayonet lever must be actuated.

Actuating elements (such as pushbuttons or emergency stop actuators) have the specified tactility and function only when assembled with the appropriate switching elements. For illuminated actuators and illuminated attachments, please use a lamp socket / LED element as the middle element in the coupling.

For RAFIX 22 QR actuating elements, you can choose between two collar shapes: round and square. The mounting diameter is 22.3 mm according to the standard. The anti-rotation lug can be easily removed with a screwdriver if necessary.

**Additional information according to UL certificate:**

- These devices should be mounted in an overall enclosure with sufficient stability and with the specified clearances.

## technical data

### general

| | |
|---|---|
| Bezel color | blue |
| Property of bezel / mushroom | transparent |
| Front ring color | light gray |
| Collar shape | round |
| Operating temperature, min. | -25 °C |
| Operating temperature, max. | 70 °C |
| Storage temperature, min. | -40 °C |
| Storage temperature, max. | 80 °C |
| illuminated | Yes |
| Packaging | Box |
| Packaging unit | 10 pcs. |
| net weight | 14.6 g |
| Operating life | 1,000,000 cycles |
| B10 | 1,300,000 cycles |
| Degree of protection, front side, according to DIN EN 60529 | IP65 |
| Degree of protection, front side, according to ISO 20653 | IP6K9K at 23°C water temperature |
| Environment resistance | IEC 60068-2-14<br>IEC 60068-2-30<br>IEC 60068-2-33<br>IEC 60068-2-78 |
| MOQ order | 50 pcs. |
| RoHS compliant | Yes |

**direct links**

- RAFI eCatalog

The information in this data sheet only contains general descriptions and / or performance features, which may not apply precisely as described to the respective application, and which my change due to further product enhancements. The technical data, illustrations and other information about our products are the mere results of individual technical testing. These descriptions and other product features are only binding if they expressly agreed upon at the time of the conclusion of a binding contract. In all other cases, we reserve the right to make technical changes as well as changes of availability. Pictures and other graphic illustrations are approximations only. All product names may be trademarks or brand names of the RAFI Group or any other sub-supplier of RAFI. The use of such by any third parties for their own purposes may infringe the rights of the respective entity holding those rights.


**RAFI GmbH & Co. KG**

Ravensburger Str. 128-134
88276 Berg / Ravensburg
Germany
www.rafi-group.com,
info.headquarters@rafi-group.com

| | |
|---|---|
| REACH compliant | Yes |
| **mounting diameters** | |
| Outside dimension, length | 29.8 mm |
| Outside dimension, width | 29.8 mm |
| Outside dimension, height | 34.4 mm |
| Mounting hole | 22.3 mm |
| Mounting depth | 56.4 mm |
| Installation height | 11.7 mm |
| Grid, min. | 50 x 30 mm |
| Collar dimension | 29,8 x 29,8 mm |
| **mechanical data** | |
| Actuation function | momentary contact function |
| Operating force, max. | 100 N |
| Operating travel, max. | 4 mm |
| Fixing | Threaded ring |
| Threaded ring torque, max. | 1.2 Nm |

The information in this data sheet only contains general descriptions and / or performance features, which may not apply precisely as described to the respective application, and which my change due to further product enhancements. The technical data, illustrations and other information about our products are the mere results of individual technical testing. These descriptions and other product features are only binding if they expressly agreed upon at the time of the conclusion of a binding contract. In all other cases, we reserve the right to make technical changes as well as changes of availability. Pictures and other graphic illustrations are approximations only. All product names may be trademarks or brand names of the RAFI Group or any other sub-supplier of RAFI. The use of such by any third parties for their own purposes may infringe the rights of the respective entity holding those rights.


**RAFI GmbH & Co. KG**

Ravensburger Str. 128-134
88276 Berg / Ravensburg
Germany
www.rafi-group.com,
info.headquarters@rafi-group.com

## drawings

### System drawing

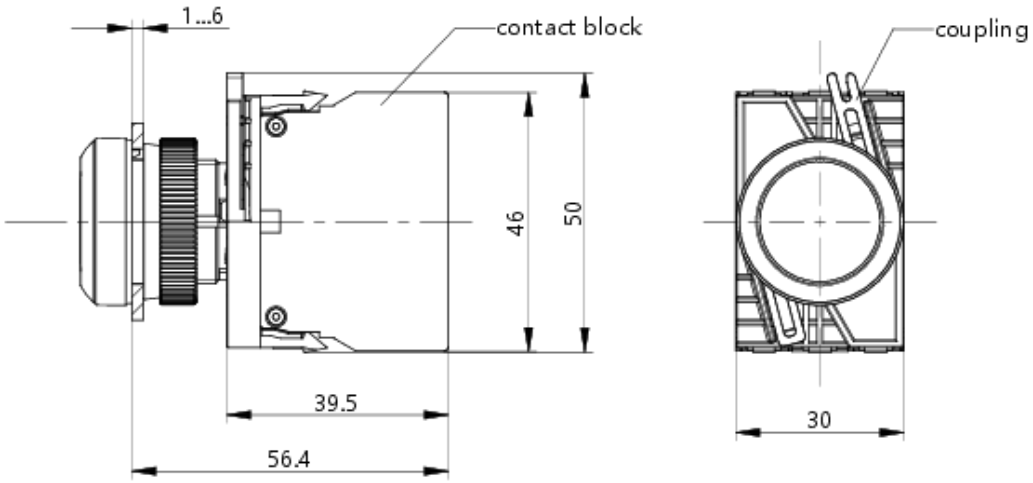


### front panel drawing

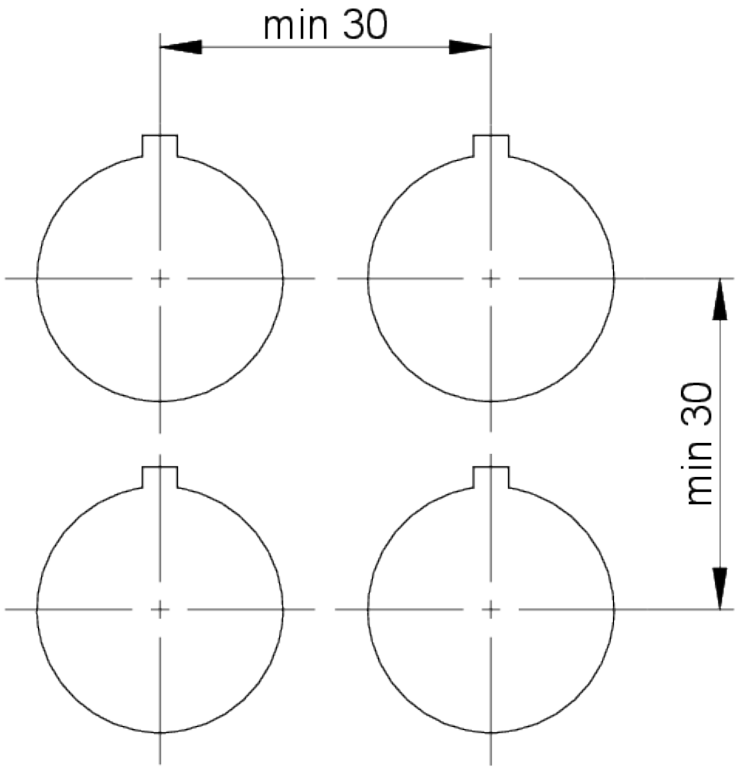


The information in this data sheet only contains general descriptions and / or performance features, which may not apply precisely as described to the respective application, and which my change due to further product enhancements. The technical data, illustrations and other information about our products are the mere results of individual technical testing. These descriptions and other product features are only binding if they expressly agreed upon at the time of the conclusion of a binding contract. In all other cases, we reserve the right to make technical changes as well as changes of availability. Pictures and other graphic illustrations are approximations only. All product names may be trademarks or brand names of the RAFI Group or any other sub-supplier of RAFI. The use of such by any third parties for their own purposes may infringe the rights of the respective entity holding those rights.


**RAFI GmbH & Co. KG**

Ravensburger Str. 128-134
88276 Berg / Ravensburg
Germany
www.rafi-group.com,
info.headquarters@rafi-group.com