1AXXXX

PCB Fuse-clips for ATC/ATM Blade, 5 mm, 1/4" & 13/32" diameter fuses

For 1/4" diameter fuses

End stops

1A1119 Family
Angled-In leads
Dimensions - in (mm)

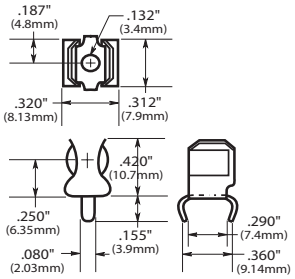

Catalog number[1,3]	Clip material[2]	Finish
1A1119-04-R	Cu clad steel	Bright tin
1A1119-05	Cu clad steel	Silver
1A1119-10-R	Cartridge brass	Bright tin

Without end stops

1A1120 Family
Angled-in leads
Dimensions - in (mm)

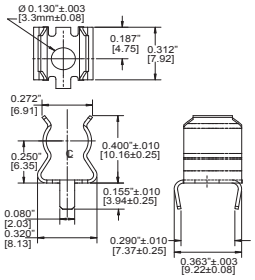

Catalog number[1,3]	Clip material[2]	Finish
1A1120-05	Cu clad steel	Silver
1A1120-06-R	Cu clad steel	Bright tin
1A1120-09-R	Cartridge brass	Bright tin

1A1907 Family
Straight leads
Dimensions - in (mm)

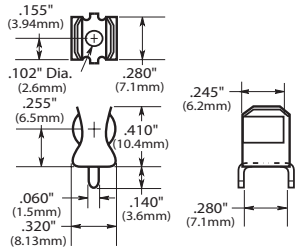

Catalog number[1,3]	Clip material[2]	Finish
1A1907-02-R	Cartridge brass	Bright dipped
1A1907-03-R	Cu clad steel	Bright tin
1A1907-05	Cu clad steel	Silver
1A1907-06-R	Cartridge brass	Bright tin

UL recognized file number: E14853

1A3398 Family
Straight leads
Dimensions - in (mm)

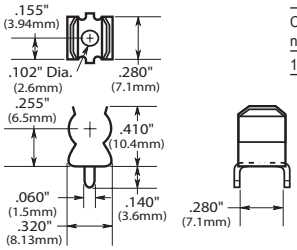

Catalog number[1,3]	Clip material[2]	Finish
1A3398-07-R	Cartridge brass	Bright tin

1A4534 Family
Angled out leads
Dimensions - in (mm)

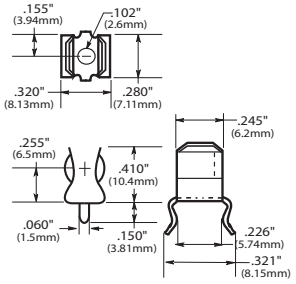

Catalog number[1,3]	Clip material[2]	Finish
1A4534-01-R	Cu clad steel	Bright tin
1A4534-06-R	Cartridge brass	Bright tin

1A4533 Family
Angled out leads
Dimensions - in (mm)

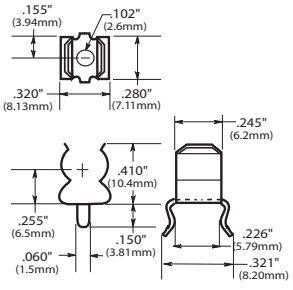

Catalog number[1,3]	Clip material[2]	Finish
1A4533-01-R	Cu clad steel	Bright tin
1A4533-06-R	Cartridge brass	Bright tin

Notes:

1. All part numbers shown are RoHS compliant
2. Add -BK prefix to part number for bulk packaging

Powering Business Worldwide

For 5 mm diameter fuses

1A5601 Family
Dimensions - in (mm)

RoHS

1A5601

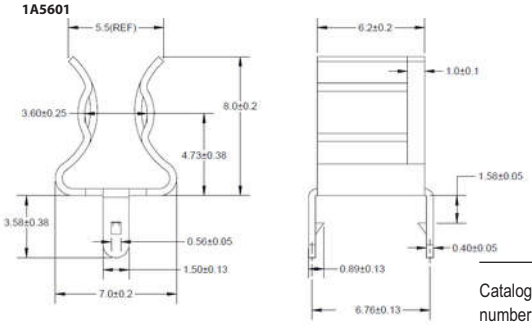

1A5601-01

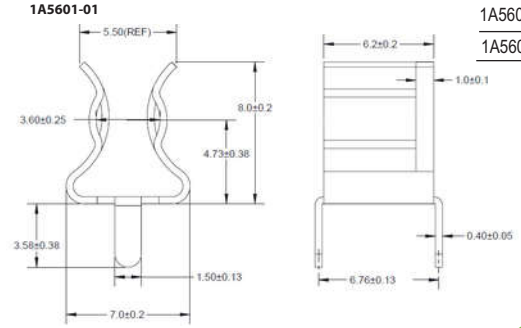

Catalog number[1,3]	Clip material[2]	Finish	Nominal current maximum
1A5601	Cartridge brass	Bright tin	7 A
1A5601-01	Spring brass	Bright tin	10 A

1A5602 Family (<= 7 A nominal current)
Dimensions - in (mm)

RoHS

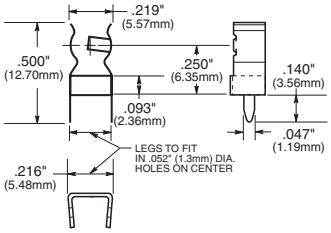

Catalog number[1,3]	Clip material[2]	Finish
1A5602	Cartridge brass	Bright tin

1A3399 and 1A5018 Family
With straight leads
Dimensions - in (mm)

RoHS

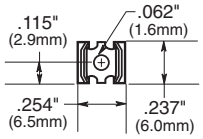

Catalog number[1,2]	Clip material	Finish
1A3399-10-R	Spring bronze	Bright tin
1A3399-01	Beryllium Cu	Silver
1A3399-04-R	Beryllium Cu	Bright tin

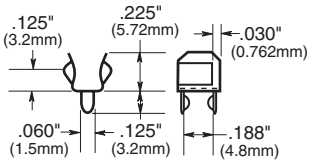

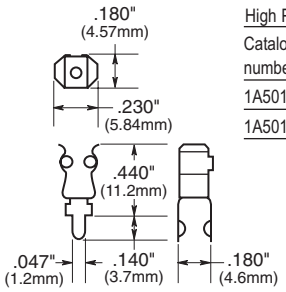

High Profile

Catalog number[1,2]	Clip material	Finish
1A5018-10-R	Spring bronze	Bright tin
1A5018-07	Spring bronze	Silver

Notes:

1. All part numbers shown are RoHS compliant
2. Add -BK prefix to part number for bulk

For 13/32" diameter fuses

1A3400 Family
With end stops & straight leads
Dimensions - in (mm)

RoHS

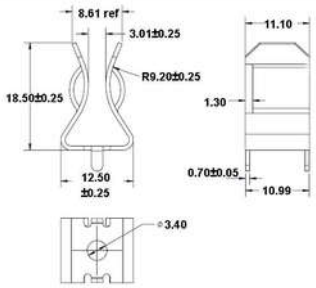

BK-1A3400-09

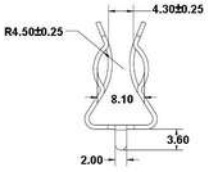

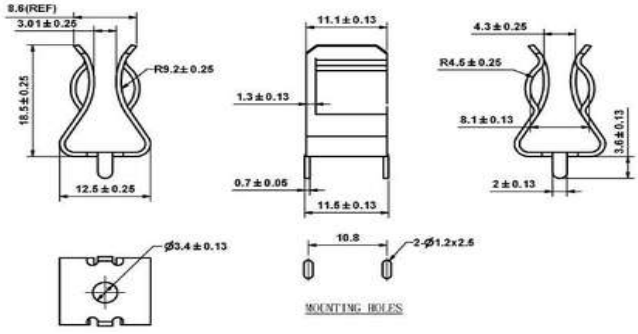

1A3400-12

Specifications:

Catalog number[1,2]	Clip material	Finish
BK-1A3400-09-R	Cartridge brass	Bright tin
1A3400-12-R	Cartridge brass	Bright tin

UL recognized file number: E14853

Notes:

1. All part numbers shown are RoHS compliant
2. Add -BK prefix to part number for bulk packaging

PCB Fuse-clips for ATC/ATM Blade, 5 mm, 1/4" & 13/32" diameter fuses

ATM Fuses 1A5778 Family

Dimensions - mm (in)

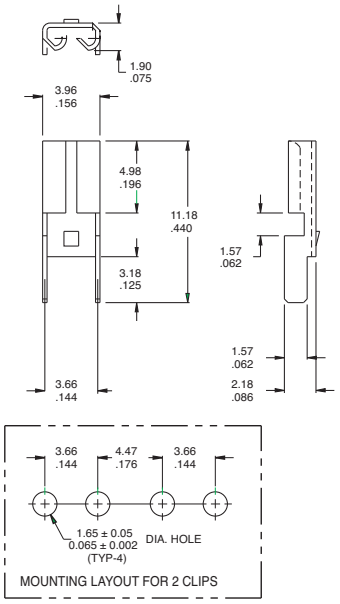

MATERIAL: BRASS, NICKEL PLATED, $\frac{.30}{.012}$ THICK

1A5779 Family

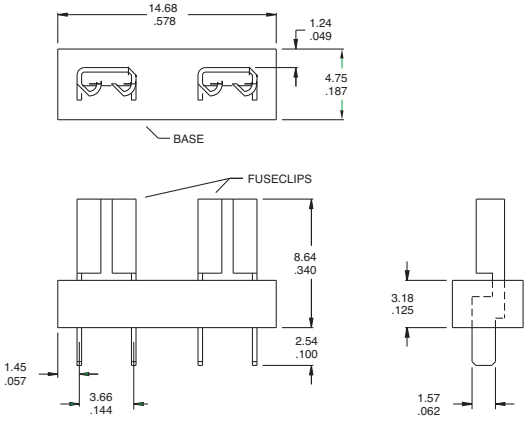

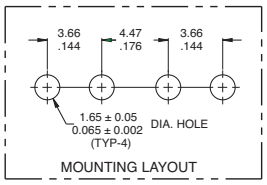

SPECIFICATIONS

FUSECLIPS	BRASS, NICKEL PLATED
BASE MATERIAL	GLASS FILLED NYLON, UL RATED 94V-0
CURRENT RATING	15 AMPS
VOLTAGE RATING	500V AC
TEMPERATURE RATING	-50°C / -58°F TO 145°C / 292°F

ATC Fuses (0 to 20 Amps)
1A5600 Family

Dimensions - in (mm)

RoHS

Catalog number	Clip material	Finish
1A5600	Cartridge brass	Matte tin

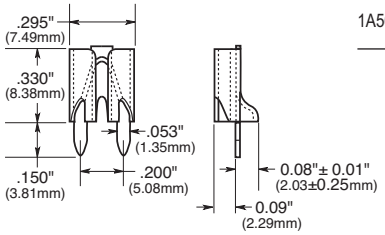

1A5780 Family

Dimensions - mm (in)

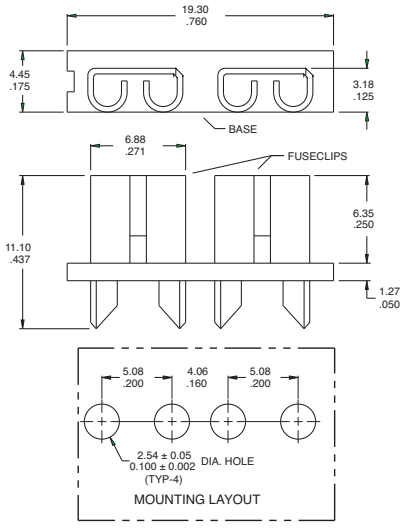

SPECIFICATIONS

FUSECLIPS	BRASS, NICKEL PLATED
BASE MATERIAL	GLASS FILLED NYLON, UL RATED 94V-0
CURRENT RATING	15 AMPS
VOLTAGE RATING	500V AC
TEMPERATURE RATING	-50°C / -58°F TO 145°C / 292°F

1AXXXX
PCB Fuse-clips for ATC/ATM Blade, 5 mm, 1/4" & 13/32" diameter fuses

Fuse clip catalog numbers

Recommended pad layout dimensions - in (mm)

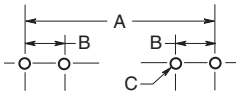

Dimensions

	A						ATC	ATM			
Catalog number	7/8" (22.2mm)	1" (25.4mm)	1 1/4" (31.8mm)	1 3/8" (34.93mm)	1 1/2" (38.10mm)	20mm	—	—	B Tabs	C (4 holes)	Board thickness
1A5778-	—	—			—	—	—	0.464" (11.79)	0.144" (3.66)	0.065"±0.002" (1.65±0.05)	0.062" (1.57)
1A5779-	—	—			—	—	—	0.464" (11.79)	0.144" (3.66)	0.065"±.002" (1.65±.05)	0.062" (1.57)
1A5780-	—	—			—	—	0.560 (14.22)	—	0.200" (5.08)	0.100"±0.002" (2.54±0.05)	0.062" (1.57)
1A3398- 1A1907-	1.00" (25.40)	1.125" (28.58)	1.375" (34.920)	—	—	—	—	—	0.295"-0.305" (7.49-7.75)	0.067"-.070" (1.70-1.78)	0.093" (2.36)
1A1119-	1.00" (25.40)	1.125" (28.58)	1.375" (34.92)	—	—	—	—	—	0.295"-0.305" (7.49-7.75)	0.093"±0.002" (2.36±0.05)	0.062" to 0.125" (1.57to3.18)
1A1120-	1.00" (25.40)	1.125" (28.58)	1.375" (34.920)	—	—	—	—	—	0.295"-0.305" (7.49-7.75)	0.093"±0.002" (2.36±0.05)	0.062" to 0.125" (1.57 to 3.18)
1A3399-	—	—			—	0.875" (22.23)	—	—	0.200" (5.08)	0.067"-.070" (1.70-1.78)	093" (2.36)
1A3400-	—	—		1.50" (38.10)	1.625"— (41.28)		—	—	0.405" (10.29)	0.091"-.095" (2.31-2.41)	0.125" (3.18)
1A4533-	1.00" (25.40)	1.125" (28.58)	1.375" (34.920)	—	—	—	—	—	0.300" (7.62)	0.067"-.070" (1.70-1.78)	0.062" (1.57)
1A4534-	1.00" (25.40)	1.125" (28.58)	1.375" (34.920)	—	—	—	—	—	0.300" (7.62)	0.067"-.070" (1.70-1.78)	0.062" (1.57)
1A5018-	—	—			—	0.820"±0.015" (20.80±0.38)	—	—	0.180" (4.6)	0.053"-.002" (1.35-0.05)	0.093" (2.36)
1A5600-	—	—			—	—	—	—	0.200" (5.08)	0.062"±0.003" (1.57±0.077)	0.125"max. (3.18)
1A5601-	—	—			—	0.820"±0.015" (20.80±0.38)	—	—	0.266" (6.76)	0.067"±0.003" (1.70±0.074)	0.062" (1.57)
1A5602-	—	—			—	—	—	—	0.220" (5.588)		0.125"max. (3.175)

Life Support Policy: Eaton does not authorize the use of any of its products for use in life support devices or systems without the express written approval of an officer of the Company. Life support systems are devices which support or sustain life, and whose failure to perform, when properly used in accordance with instructions for use provided in the labeling, can be reasonably expected to result in significant injury to the user.

It is the responsibility of the end user to verify suitability of the fuse clip in the end application. Application testing is strongly recommended.

Eaton reserves the right, without notice, to change design or construction of any products and to discontinue or limit distribution of any products. Eaton also reserves the right to change or update, without notice, any technical information contained in this bulletin.

Eaton
Electronics Division
1000 Eaton Boulevard
Cleveland, OH 44122
United States
Eaton.com/electronics

© 2021 Eaton
All Rights Reserved
Printed in USA
Publication No. 2131 PCN-21016
August 2021

Eaton is a registered trademark.

All other trademarks are property of their respective owners.

Follow us on social media to get the latest product and support information.

Powering Business Worldwide