DSF Series - small - Polyurethane hose polyester base



Description						
Reference	**ID/OD (mm)**	**Length (m)**	**Coupler**	**Flow rate (l/min)**	**Swivel inlet (mm)**	**Weight (kg)**
DSF 0805BS	8 x 11	5	BSI 06	650	8 x 11	3
DSF 1003BS	10 x 14	3	BSI 06	750	10 x 14	3
DSF 0805ES	8 x 11	5	ESI 07	650	8 x 11	3
DSF 1003ES	10 x 14	3	ESI 07	1100	10 x 14	3
DSF 0805IS	8 x 11	5	ISI 06	650	8 x 11	3
DSF 1003IS	10 x 14	3	ISI 06	833	10 x 14	3
DSF 0805CS	8 x 11	5	CSI 06	650	8 x 11	3

Prevost UK LTD - Unit G, Tower Business Park - Commercial Road - BB3 OFJ Darwen - Lancashire - United kingdom
Phone. (+44) 01254 873 389 -sales@prevost-ltd.co.uk - www.prevost.eu

Reference	ID/OD(mm)	Length (m)	Coupler	Flow rate (l/min)	Swivelinlet (mm)	Weight(kg)
DSF 1003CS	10 x 14	3	CSI 06	833	10 x 14	3

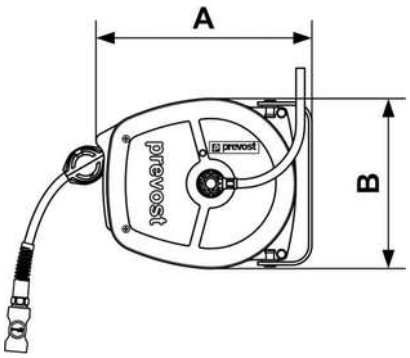

Dimensions		
Reference	**A mm**	**B mm**
DSF 0805BS	275	218
DSF 1003BS	275	218
DSF 0805ES	275	218
DSF 1003ES	275	218
DSF 0805IS	275	218
DSF 1003IS	275	218
DSF 0805CS	275	218
DSF 1003CS	275	218

Prevost UK LTD - Unit G, Tower Business Park - Commercial Road - BB3 OFJ Darwen - Lancashire - United kingdom
Phone. (+44) 01254 873 389 -sales@prevost-ltd.co.uk - www.prevost.eu