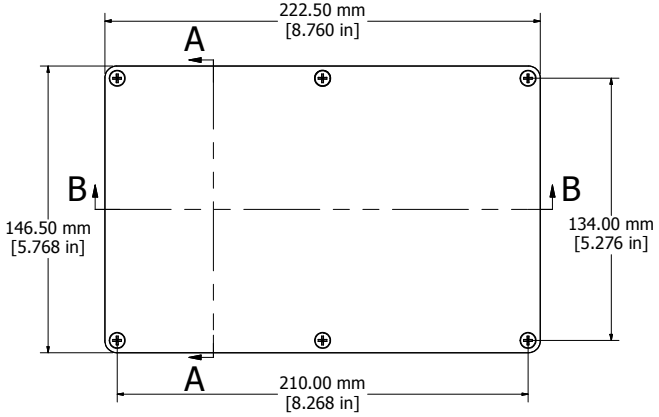

ASSEMBLY

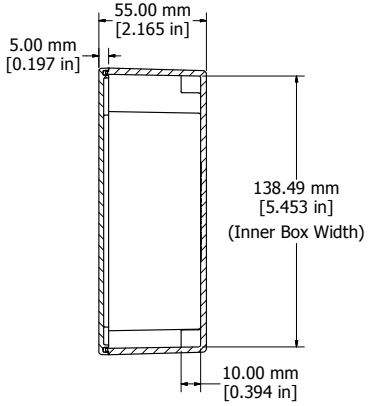

SECTION A-A
End View of Assembly

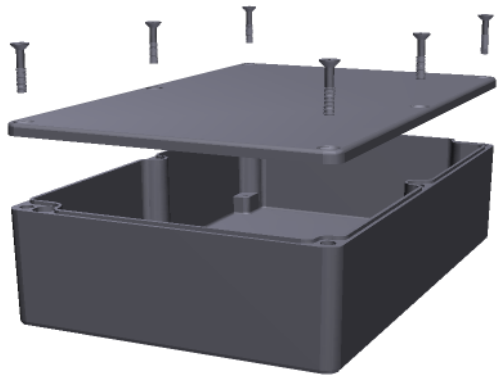

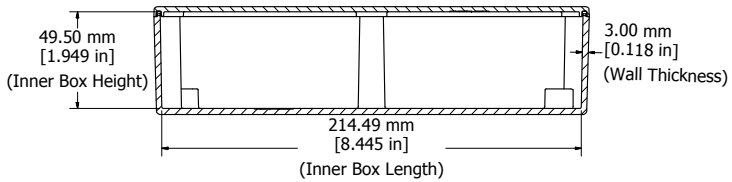

SECTION B-B
Side View of Assembly

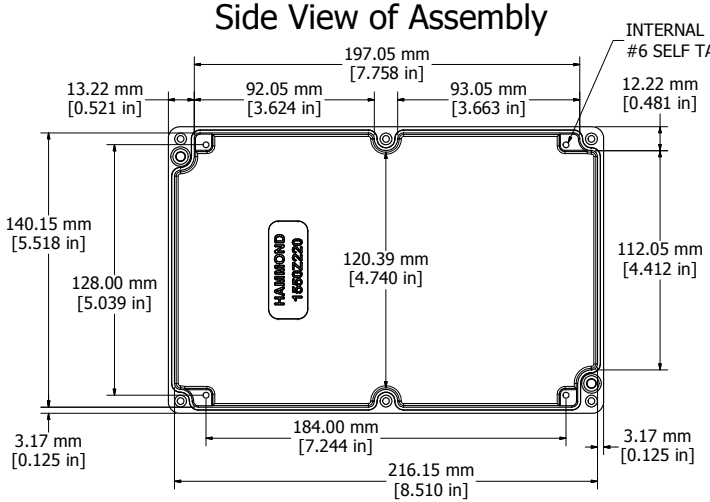

Top View Looking Inside Box

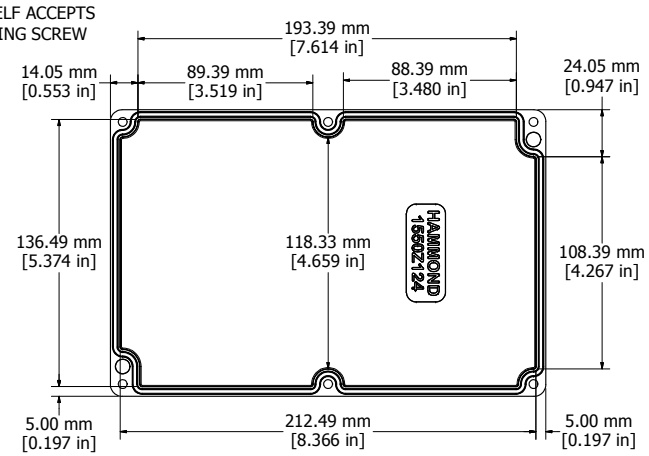

View Looking Inside Lid

c UL us LISTED
File #E71073
NEMA 4, 4X

Enclosures can be Factory Modified (Milling, Drilling, Printing etc.)
Contact Factory mjm@hammondmfg.com for quotes
Solid models of this enclosure available in STEP or IGES.

NOTES
Purchased assembly includes enclosure, M4x20 lid screws and Pre-formed Silicone Gasket
Cover screws should be torqued to 5-7.5 lbf.in (50-75 cN.m)

1550Z124	
PART NUMBERS	
Natural Finish Enclosure	1550Z124
Black Textured Enclosure	1550Z124BK

HAMMOND MANUFACTURING™

1550Z124

www.hammondmfg.com