IE5353

Inductive sensor

IEB3002BBPKG/AS

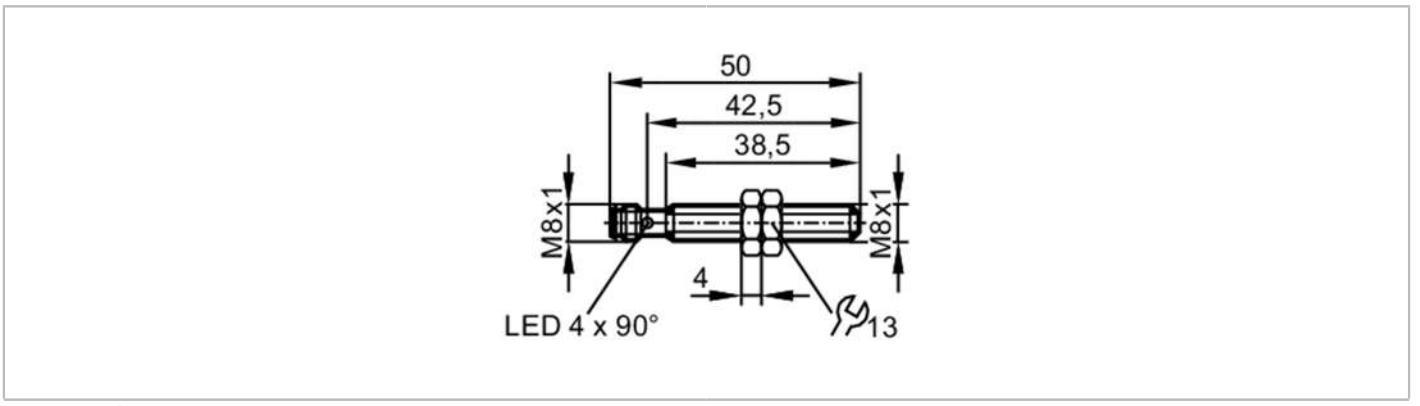

Product characteristics		
Electrical design		PNP
Output function		normally open
Sensing range	[mm]	2
Housing		threaded type
Dimensions	[mm]	M8 x 1 / L = 50
Application		
Special feature		Increased sensing range
Electrical data		
Operating voltage	[V]	10...30 DC
Current consumption	[mA]	< 10
Protection class		III
Reverse polarity protection		yes
Outputs		
Electrical design		PNP
Output function		normally open
Max. voltage drop switching output DC	[V]	2.5
Permanent current rating of switching output DC	[mA]	100
Switching frequency DC	[Hz]	1300
Short-circuit protection		yes
Overload protection		yes
Detection zone		
Sensing range	[mm]	2
Real sensing range Sr	[mm]	2 ± 10 %
Operating distance	[mm]	0...1.62
Increased sensing range		yes
Accuracy / deviations		
Correction factor		steel: 1 / stainless steel: 0.7 / brass: 0.5 / aluminium: 0.4 / copper: 0.3
Hysteresis	[% of Sr]	1...20
Switch point drift	[% of Sr]	-10...10

IE5353

Inductive sensor

IEB3002BBPKG/AS

Operating conditions			
Ambient temperature	[°C]	-25...70	
Protection		IP 65; IP 67; (with ifm socket duly screwed on)	
Tests / approvals			
EMC		EN 61000-4-2 ESD	4 kV CD / 8 kV AD
		EN 61000-4-3 HF radiated	10 V/m
		EN 61000-4-4 Burst	2 kV
		EN 61000-4-6 HF conducted	10 V
		EN 55011	class B
MTTF	[years]	1379	
Embedded software included		yes	
UL approval		Ta	-25...80 °C
		Enclosure type	Type 1
		power supply	Limited Voltage/Current
		UL Approval no.	A017
		File number UL	E174191
Mechanical data			
Weight	[g]	18.5	
Housing		threaded type	
Mounting		flush mountable	
Dimensions	[mm]	M8 x 1 / L = 50	
Thread designation		M8 x 1	
Materials		brass white bronze coated; sensing face: PBT orange; LED window: PPSU; lock nuts: brass white bronze coated	
Tightening torque	[Nm]	A = 5 mm: ≤ 1,5 Nm; B: ≤ 2 Nm	
Displays / operating elements			
Display		switching status	4 LED, yellow
Accessories			
Items supplied		lock nuts: 2	
Remarks			
Pack quantity		1 pcs.	

Electrical connection - plug

Connector: 1 x M8; coding: A



IE5353

Inductive sensor

IEB3002BBPKG/AS

Connection

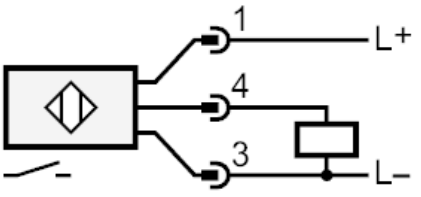

Diagrams and graphs

Installation

