E61443

Draw-wire mechanism for encoders

DRAW WIRE 10000

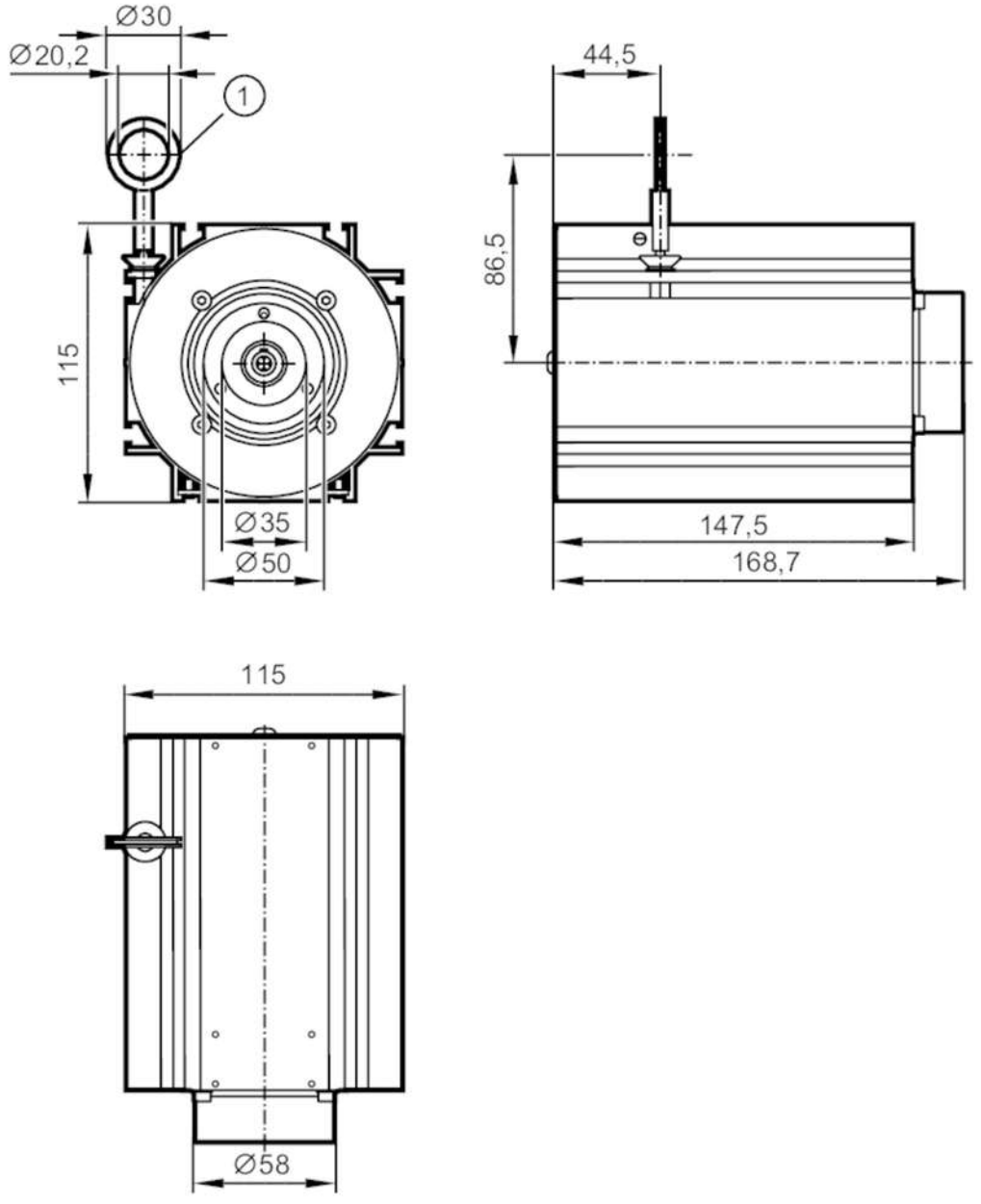

1 eyelet 20.2 mm Ø

Product characteristics		
Shaft design		solid shaft
Shaft diameter	[mm]	6
Application		
Design		for encoders with 58 mm synchro flange and 6 mm solid shaft
Accuracy / deviations		
Accuracy		± 0.01 % FSO
Repeatability		± 0,001 % FSO
Operating conditions		
Ambient temperature	[°C]	-20...80
Storage temperature	[°C]	-40...80

E61443

Draw-wire mechanism for encoders

DRAW WIRE 10000

Storage humidity	[%]	5...95; (non condensing)		
Tests / approvals				
Shock resistance		IEC628-2-27	50 g / 20 ms	
Vibration resistance		IEC68-2-6	20 g / 20..200 Hz	
Mechanical data				
Weight	[g]	3510.8		
Dimensions	[mm]	115 x 168.7 x 115		
Top flange diameter	[mm]	58		
Materials		housing: aluminium anodised; wire: stainless steel polyamide coated		
Shaft design		solid shaft		
Shaft diameter	[mm]	6		
Max. measuring length	[mm]	10000		
Wire drum circumference	[mm]	315		
Wire diameter	[mm]	1		
Wire connection		20,2; (eyelet)		
Wire properties		max. speed of wire displacement	[m /s]	2
		max. wire acceleration	[g]	6
		max. extension force	[N]	21
		min. retraction force	[N]	8
Fixing flange		synchro-flange		
Accessories				
Items supplied		screws: 3 x M4		
		cylinder screws: 4 x M4		
		washers		
		synchro-flange		
		Coupling for encoders		
Remarks				
Pack quantity		1 pcs.		
Diagrams and graphs				

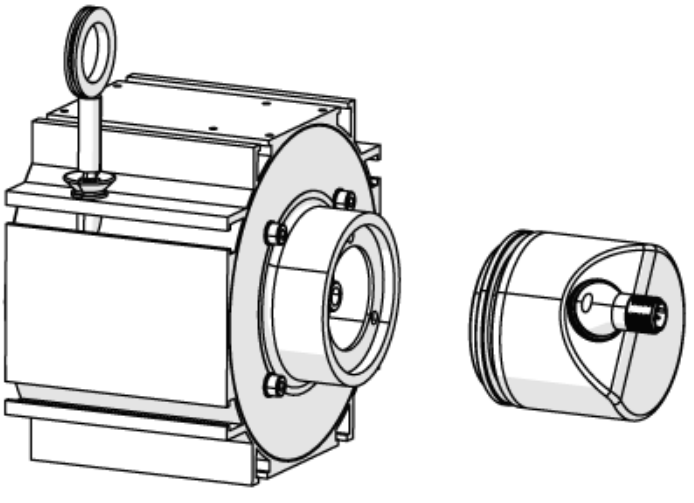

Installation instruction