Short-stroke cylinder, Series SSI, double-acting, without magnetic piston

R480637904

- Ideal for simple assembly and clamping movements, tight installation space, and short strokes
- Mount on moving machine parts possible thanks to their low weight
- Intelligent connection concept
- Available in piston diameters from 12 mm to 100 mm
- Available as piston rod, single or double-acting cylinders, with a hollow piston rod, as a non-rotating version with a front plate, or an especially short version without a magnet



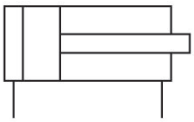

AVENTICS Series SSI Short-stroke cylinders (ISO 15524)

The AVENTICS Series SSI are short stroke cylinders in accordance with the latest ISO standard 15524. The cylinders are compact and up to 30% lighter than comparable cylinders thanks to weight optimized profiles. In addition, they provide a high degree of flexibility in sensor assembly and extremely effective elastic cushioning.

Technical data

Industry	Industrial
Standards	ISO 15524
Piston Ø	100 mm
Stroke	10 mm
Ports	G 3/8
Functional principle	Double-acting
Cushioning	Elastic cushioning
Magnetic piston	Piston without magnet
Environmental requirements	Industry standard
Piston rod thread - type	Piston rod: internal thread
Piston rod thread	M20
Piston rod	single
Scraper	Standard Industry Scraper
Pressure for determining piston forces	6,3 bar
Retracting piston force	4441 N
Extracting piston force	4948 N
Min. ambient temperature	-20 °C
Max. ambient temperature	80 °C
Min. working pressure	0.6 bar

Short-stroke cylinder, Series SSI, double-acting, without magnetic piston

R480637904

Max. working pressure	10 bar
Impact energy	0.5 J
Weight 0 mm stroke	1.83 kg
Weight +10 mm stroke	0.168 kg
Stroke max.	150 mm
Medium	Compressed air
Min. medium temperature	-20 °C
Max. medium temperature	80 °C
Max. particle size	50 µm
Min. oil content of compressed air	0 mg/m³
Max. oil content of compressed air	5 mg/m³

Material

Piston rod	Stainless Steel
Scraper material	Polyurethane
Seal material	Nitrile butadiene rubber
Material, front cover	Aluminum
Cylinder tube	Aluminum
End cover	Aluminum
Part No.	R480637904

Technical information

For this variant with external thread, two different external threads with the dimensions indicated below can be selected in the configurator .

Note the selection of fittings for strokes < 10 mm.

The pressure dew point must be at least 15 °C less than ambient and medium temperature and may not exceed 3 °C.

The oil content of compressed air must remain constant during the life cycle.

Use only the approved oils from AVENTICS. Further information can be found in the “Technical information” document (available in https://www.emerson.com/en-us/support).

Short-stroke cylinder, Series SSI, double-acting, without magnetic piston

R480637904

Dimensions

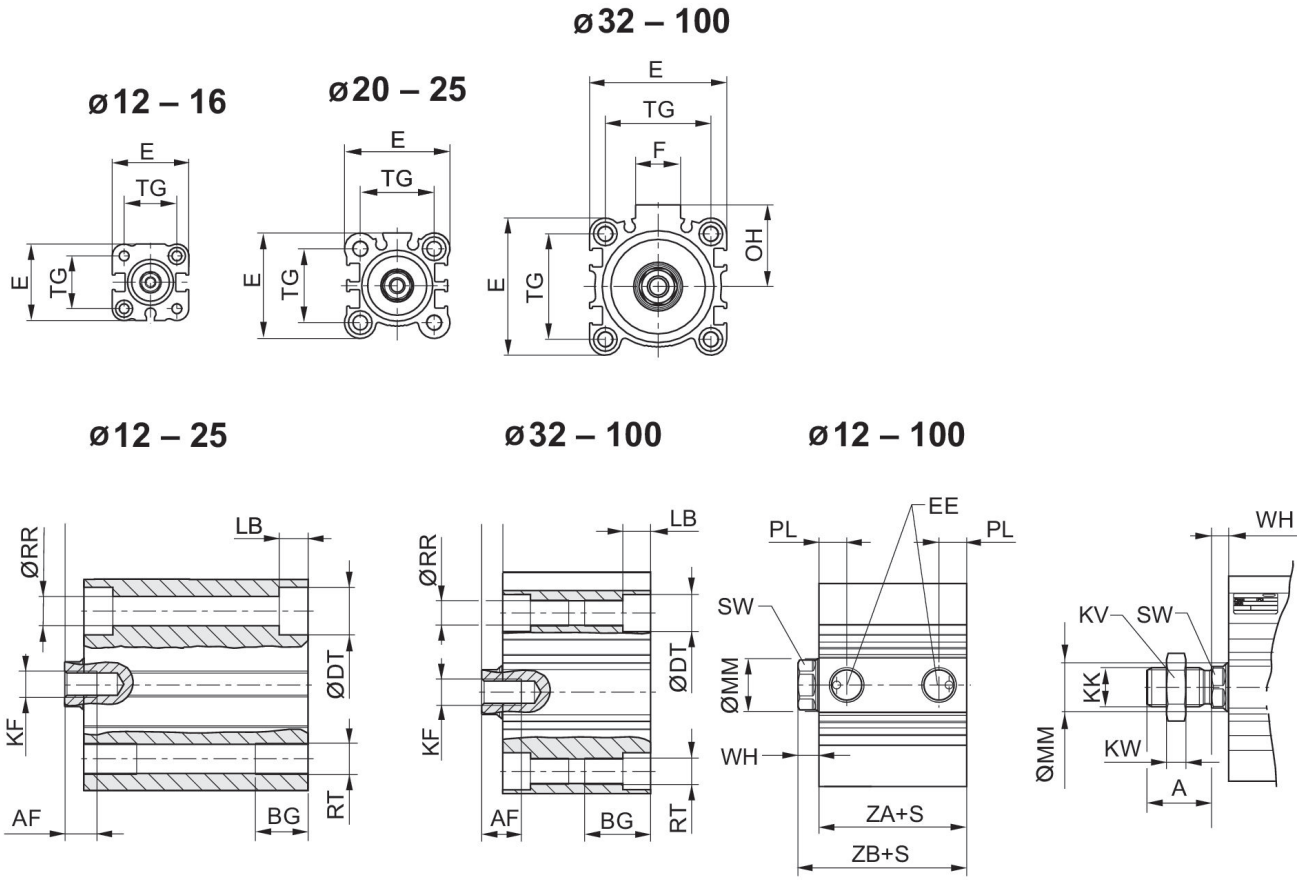

S = stroke

Piston Ø	A ±0.3	AF	BG	ØDT	E	EE	F	KF	KK 1)
12	10,5	6	7	6,5	25	M5	-	M3	M4
16	12	8	7	6,5	29	M5	-	M4	M6
20	14	7	10	9	36	M5	-	M5	M8
25	17,5	12	10	9	40	M5	-	M6	M10x1.25
32	21,5	13	16	9	45	G 1/8	17	M8	M12x1.25
40	21,5	13	16	9	52	G 1/8	17	M8	M12x1.25
50	26,5	15	20	11	64	G 1/4	21	M10	M16x1.5
63	26,5	15	25	14	77	G 1/4	21	M10	M16x1.5
80	34	21	30	17,5	98	G 3/8	26	M16	M20x1.5
100	33	27	30	17,5	117	G 3/8	26	M20	M20x1.5

Piston Ø	KK 2)	KV 1)	KV 2)	KW 1)	KW 2)	LB max.	ØMM f8	OH	ØRR
12	M5	7	8	2,2	2,7	3,5	6	-	3,7
16	M6	10	10	3,2	3,2	3,5	8	-	3,7
20	M8	13	13	4	4	5,5	10	-	5,55

Short-stroke cylinder, Series SSI, double-acting, without magnetic piston

R480637904

Piston Ø	KK 2)	KV 1)	KV 2)	KW 1)	KW 2)	LB max.	ØMM f8	OH	ØRR
25	M10x1.25	17	17	6	6	5,5	12	-	5,55
32	M14x1.5	18	22	6	8	5,5	16	27	5,55
40	M14x1.5	18	22	6	8	5,5	16	31	5,55
50	M18x1.5	24	27	8	9	8	20	39	7,4
63	M18x1.5	24	27	8	9	10,5	20	45,5	9,3
80	M22x1.5	30	32	10	10	13,5	25	59	11,2
100	M26x1.5	30	41	10	13,5	13,5	32	65	11,2

Piston Ø	RT	SW	TG	WH 3)	WH 4)	X1	X2	S	PL
12	M4	5	15,5 ±0,3	3,5 ±1,5	3,5 ±1,5	0	0	2-4	4,5
								≥5	5,5
16	M4	7	20 ±0,3	3,5 ±1,5	3,5 ±1,5	0	0	≥2	5,5
20	M6	8	25,5 ±0,3	4,5 ±1,5	4,5 ±1,5	5,7	4,275	≥2	5,5
25	M6	10	28 ±0,3	5 ±1,5	5 ±1,5	6	5	≥2	5,5
32	M6	13	34 ±0,3	7 ±2	7 ±2	8,5	7,5	2-4	6,3
								≥5	7,5
40	M6	13	40 ±0,3	7 ±2	7 ±2	10,75	11	≥2	7,5
50	M8	17	50 ±0,5	8 ±2	7 ±2	14	13	2-8	7,5
								≥9	10,5
63	M10	17	60 ±0,5	8 ±2	7 ±2	17	17	≥2	10,5
80	M12	22	77 ±0,5	10 ±2	9,5 ±2	23,5	21	≥2	12,5
100	M12	27	94 ±0,5	12 ±2,5	10,5 ±2,5	31	28	≥2	14

Piston Ø	ZA±0,2	ZB±2 3)	ZB±2 4)
12	17	20,5	20,5
16	18,5	22	22
20	19,5	24	24
25	22,5	27	27
32	23	30	30
40	29,5	36,5	36,5
50	30,5	38,5	37,5
63	36	44	43
80	43,5	53,5	53
100	53	65	63,5

1) Compatible with piston rod accessories
2) Compatible with third-party products

3) Internal thread
4) External thread

Short-stroke cylinder, Series SSI, double-acting, without magnetic piston

R480637904

Maximum admissible lateral force
Ø 32 ... 100 mm

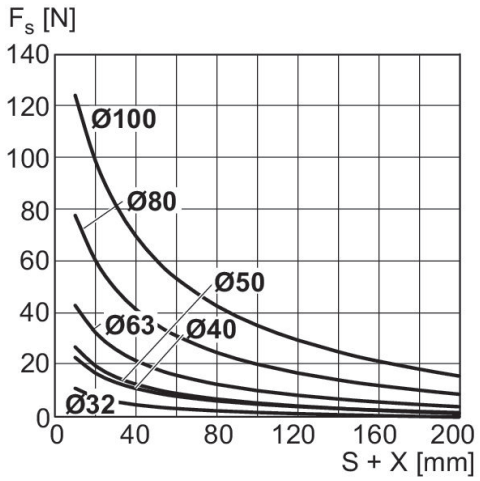

X = distance between force application point and cylinder cover
FS = lateral force
S = stroke

Maximum admissible lateral force
Ø 12 ... 25 mm

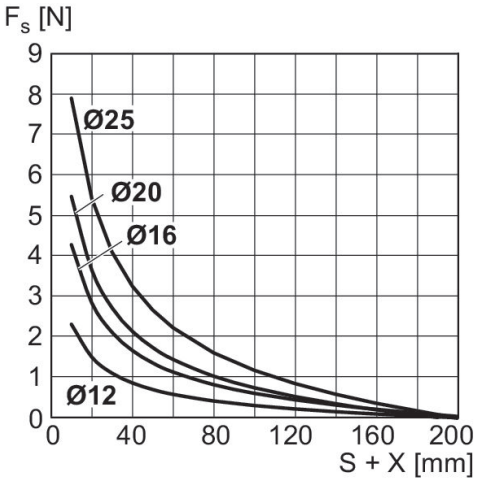

X = distance between force application point and cylinder cover
FS = lateral force
S = stroke

Maximum admissible lateral force
Ø 12 ... 25 mm

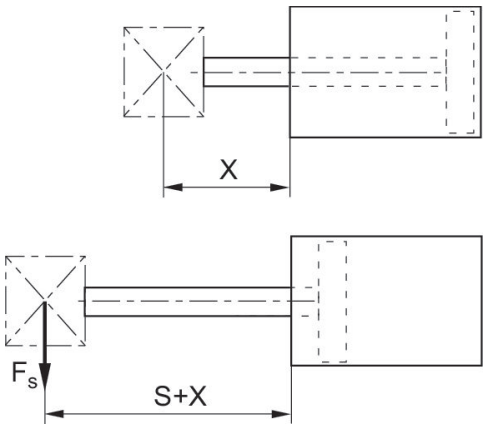

X = distance between force application point and cylinder cover
FS = lateral force
S = stroke

Short-stroke cylinder, Series SSI, double-acting, without magnetic piston

R480637904

Overview drawing

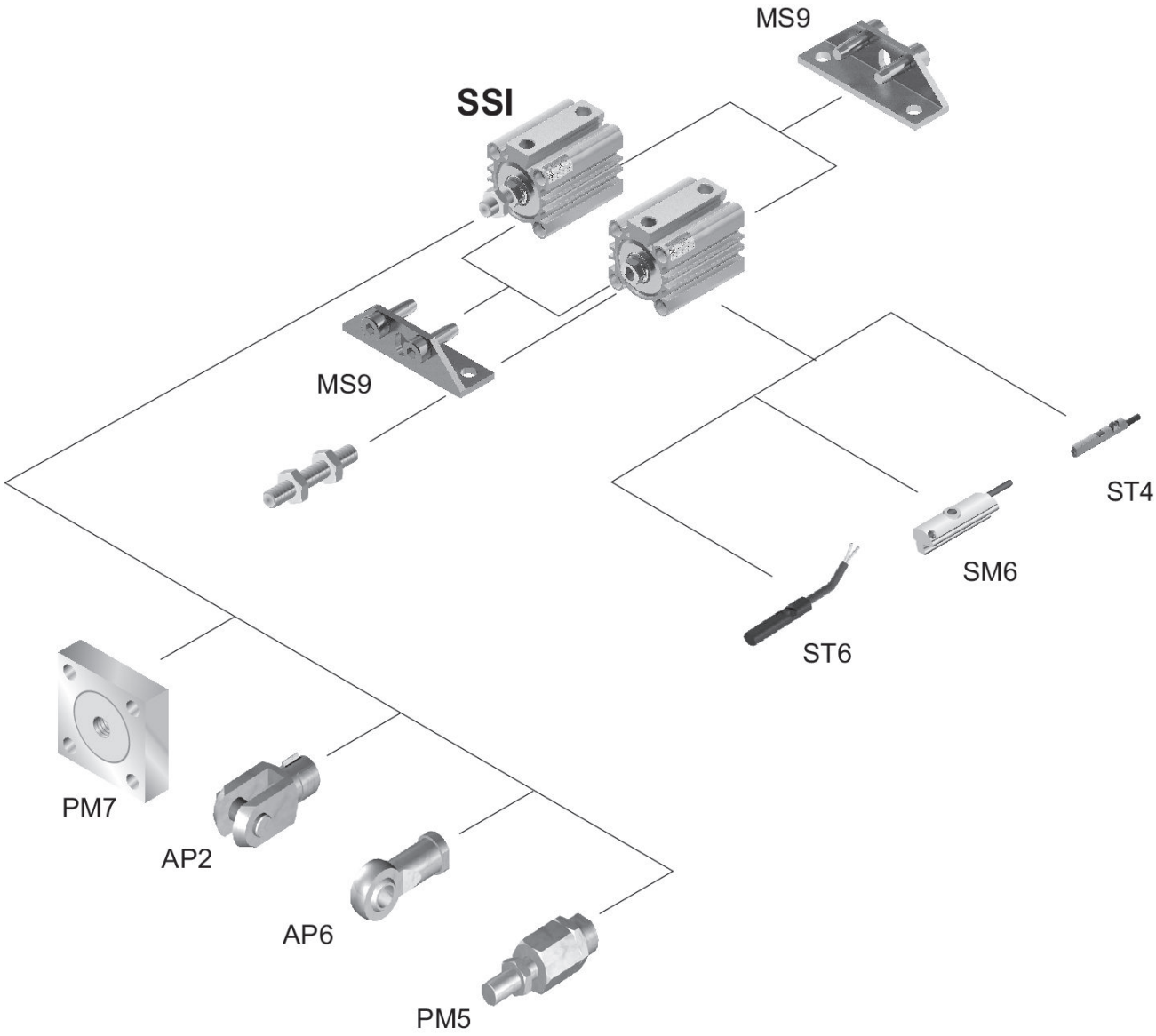

Use our Internet configurator to order variants with an external thread.
NOTE: This overview drawing is only for orientation to indicate where the various accessory parts can be fastened to the cylinder. The illustration has been simplified for this purpose. It is thus not possible to derive the dimensions from this overview.