HE700 Miniature Dual In-line Reed Relay



Description

The HE700 is a miniature reed relay in a DIL package with a choice of normally open, normally open high voltage, normally closed or changeover contacts capable of switching up to 300Vdc at 10W. It is available with 5V, 12V, and 24V coils and diode suppression and also available with magnetic shield option.

Features

- Miniature dual in-line package
- Optional coil suppression diode to protect coil drive circuits
- External magnetic shield option
- Diode suppression option
- RoHS Compliant

Benefits

- One relay, various contacts choices reducing space and cost without compromising flexibility
- Lower power coil consumption than competing electromechanical devices.
- Hermetically sealed switching contact is immune to the effects of its environment
- Transfer molded package gives maximum component protection

Applications

- Security Systems
- Telecom Equipments
- Process Control Systems
- Industrial Equipments
- Instrumentation

Agency Approvals

Agency	Agency File Number
c UL us	E47258

Note: Contact Littelfuse for specific agency approval ratings.

Dimensions

Dimensions in mm (inch)

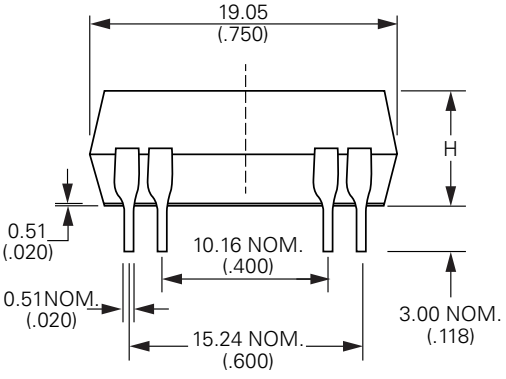

Fig. 1: HE700

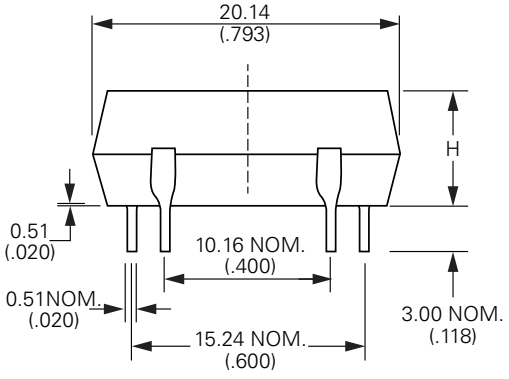

Fig. 2: HE751

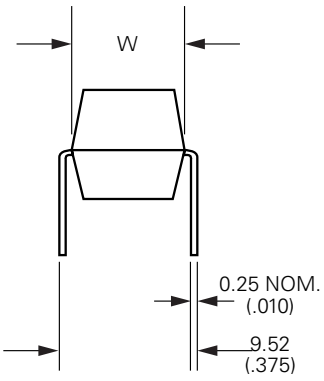

Fig. 3: HE700 (All)

Table 1: Dimension

Relay Type	Body Type	L	W	H
HE700	Transfer Molded	19.05 (.750)	7.22 (.284)	5.50 (.217)
	External Shield	20.14 (.793)	7.62 (.300)	5.82 (.229)

© 2017 Littelfuse Revised: 10/30/17
Specifications are subject to change without notice.

HE700 Miniature Dual In-line Reed Relay

Table 2: Electrical and Operating Characteristics @ 25°C

Column Number			1	2	3	4
Contact Type			**Form A SPST, DPST Standard**	**Form C SPDT-CO Standard**	**Form A SPST High Voltage**	**Form B SPST-NC Standard**
Relay Types			**HE721, HE722**	**HE721C/E/R**	**HE751**	**HE721**
Contact Rating [1]	Power, Switching Voltage, Switching Current, Switching Current, Carry	Watt - max. Vdc - max. A - max. A - max.	10 200 0.5 1.2	5 175 0.25 1.5	10 300 0.5 1.2	10 200 0.5 1.5
Voltage Hold-off [4]	Across Open Contacts Contacts to Coil Coil to E. Shield Between Isolated Terminals	Vdc - min. Vac - min. Vac - min. Vac - min.	250 500 150 500	200 500 150 N/A	450 4000 N/A N/A	250 500 N/A N/A
Resistance [5]	Contact, Initial Insulation Across Open Contacts Insulation Between Isolated Terminals	Ω max. Ω min. Ω min.	0.150 10^{10} 10^{10}	0.200 10^{10} 10^{10}	0.150 10^{10} 10^{10}	0.150 10^{10} 10^{10}
Timing	Operate Time Release Time	ms - max. ms - max.	1.0 1.0	3.0 3.0	1.0 1.0	1.0 1.0
Environmental	Temperature, Operating Temperature, Storage Vibration Resistance Shock Resistance	°C °C G - max. 10-2000 Hz. G - max. 11 ms ½ sine	-40 to +85 -40 to +105 20 50	-40 to +85 -40 to +105 20 50	-20 to +85 -40 to +105 20 50	-40 to +85 -40 to +105 20 50

Part Numbering System

HE7X - X - X - X - XX

Model Number
HE72 - Standard
HE75 - High Voltage

Number of Contacts
1 and 2

Contact Type
A - Form A (SPST-NO or DPST-NO)
B - Form B (SPST-NC)
C - Form C (SPDT-CO)
E - Form C (SPDT-CO) alternate foot print 1
R - Form C (SPDT-CO) alternate foot print 2

Standard Coil
05 - 5 Volt
12 - 12 Volt
24 - 24 Volt

General Options
00 - No Options
10 - Coil Suppression Diode
20 - Electrostatic Shield
30 - Coil Diode and E.S. Shield
40 - External Magnetic Shield
50 - External Magnetic Shield and Diode

Note: Not all combinations of Part Number suffixes are available. Contact Littelfuse for details.

© 2017 Littelfuse

HE700 Miniature Dual In-line Reed Relay

Table 3: Coil Characteristics @ 25°C

Contact Form	Electrical and Operating Characteristics	Dimensions	Part Number	Nominal Coil Voltage Vdc	Coil Resistance ±10% Ohms	Must Operate Vdc	Must Release Vdc	Maximum Coil Voltage Vdc	Top View 2.54mm (0.1") Grid Dot on Case: Pin 1 Numbers not printed on case.
1A SPST-NO	See Table 2 Column 1	Figure 1	HE721A0500 HE721A1200 HE721A2400	5 12 24	500 1000 2150	3.75 8.0 16.0	0.5 1.0 2.0	12 31 46	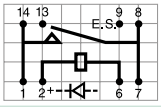
1B SPST-NC	See Table 2 Column 4	Figure 1	HE721B0500 HE721B1200 HE721B2400	5 12 24	500 500 2150	3.75 9.0 18.0	0.5 1.0 2.0	Notes 1 and 2 6.5 14 28	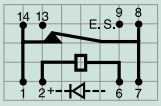
1C SPDT-CO	See Table 2 Column 2	Figure 1	HE721C0500 HE721C1200 HE721C2400	5 12 24	200 500 2000	3.75 8.0 16.0	0.5 1.0 2.0	14 22 44	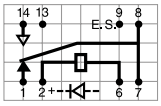
1C SPDT-CO	See Table 2 Column 2	Figure 1	HE721E0500 HE721E1200 HE721E2400	5 12 24	200 500 2000	3.75 8.0 16.0	0.5 1.0 2.0	14 22 44	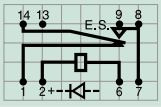
1C SPDT-CO	See Table 2 Column 2	Figure 1	HE721R0500 HE721R1200 HE721R2400	5 12 24	200 500 2000	3.75 8.0 16.0	0.5 1.0 2.0	14 22 44	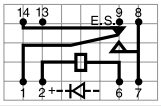
2A DPST-NO	See Table 2 Column 1	Figure 1	HE722A0500 HE722A1200 HE722A2400	5 12 24	200 500 2150	3.75 8.0 16.0	0.5 1.0 2.0	12 22 46	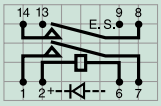
1A SPST-NO High Voltage	See Table 2 Column 3	Figure 2	HE751A0500 HE751A1200 HE751A2400	5 12 24	500 1000 2150	3.75 8.0 16.0	0.5 1.0 2.0	12 31 46	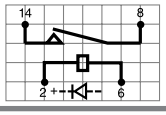

Notes:
1. HE721B - Exceeding recommended voltage may cause contact reclosure.
2. Optional external magnetic shield not available on Form B relays.

HE700 PCB LAYOUT (Bottom View)

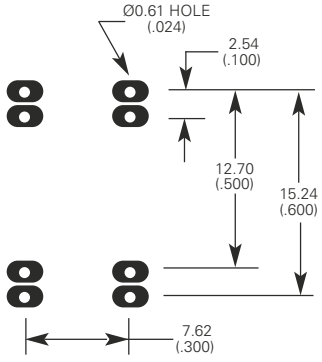

Disclaimer Notice - Information furnished is believed to be accurate and reliable. However, users should independently evaluate the suitability of and test each product selected for their own applications. Littelfuse products are not designed for, and may not be used in, all applications. Read complete Disclaimer Notice at www.littelfuse.com/disclaimer-electronics.

Packaging

Packaging Option	Packaging Specification	Quantity	Quantity & Packaging Code	Taping Width
Bulk	Bulk	1000/5000	N/A	N/A