CL11

INDOOR AIR QUALITY DATA LOGGER

- Measures and logs CO_2, relative humidity and temperature
- ROTRONIC HYGROMER® IN-1 humidity sensor
- 40,000 data point memory for CO_2, humidity and temperature values
- Maximum, minimum and average values displayed
- Adjustable audible and visual CO_2 alarm
- Optional external temperature probe
- Includes software for configuration and data download





rotronic
MEASUREMENT SOLUTIONS

CL11

BE PRECISE:
THE MAIN ADVANTAGES AT A GLANCE

The CL11 benchtop display unit is the latest development of an inexpensive multiple parameter meter that simultaneously measures and records CO_2, humidity and temperature. Equipped with the field-tested ROTRONIC HYGROMER® IN-1 humidity sensor, this instrument offers unbeatable value for money. Using the ROTRONIC software package SW21, it can be easily set to record as required and data can then be downloaded, saved and analyzed.

Sensors / Calibration
- HYGROMER® IN-1 humidity sensor
- Calibration of humidity sensor at 35/80 %RH
- Automatic CO_2 calibration and manually at 400 ppm

Data logging function
- 40,000 data point memory for CO_2, humidity and temperature values
- Data download using the included ROTRONIC Software SW21 or with the optional HW4 Software

Connections
- Mini USB port for connection to a PC
- 5 VDC power supply connector for the included AC adapter

CO_2 alarm
- Adjustable audible CO_2 alarm

Large display
- With backlight

Controls
- Large buttons for easy operation



Temperature probe
- External temperature probe AC1215 (optional)

APPLICATIONS





Indoor air quality

PRINCIPLES

The CL11 data logger evaluates air quality with the combined measurements of CO_2, humidity, and temperature. These measurements are important to understand Indoor Air Quality (IAQ) in classrooms, conference and waiting rooms, as well as any indoor areas where people gather. A high concentration of carbon dioxide can develop quickly when closed rooms with insufficient ventilation are filled with people.

Carbon dioxide (CO_2) is a colorless and odorless gas that exists in the earth's atmosphere and which is dangerous in high concentrations. The proportion of CO_2 in natural ambient air is about 0.04% or 400 ppm. Exhaled air contains approximately 3.8% by volume CO_2, which quickly mixes with the ambient air. When closed rooms are insufficiently ventilated, the levels of CO_2 increase quickly leading to fatigue and loss of concentration for the rooms occupants. In order to initiate improvements to the air quality, for example by increasing the supply of fresh air, it is important to measure the key parameters of indoor air quality. These parameters are CO_2, humidity, and temperature.

Guidelines

350 - 450 ppm	400 - 1,200 ppm	› 1,000 ppm	5,000 ppm (0.5%vol)	38,000 ppm (3.8%vol)	› 100,000 ppm (10%vol)
Fresh air outdoors	Room air	Fatigue and loss of concentration become apparent	Maximum permissible value at the workplace during an 8-hour workday	Breathing air (direct exhalation)	Nausea, vomiting, loss of consciousness and death

TECHNICAL INFORMATION

Dimensions

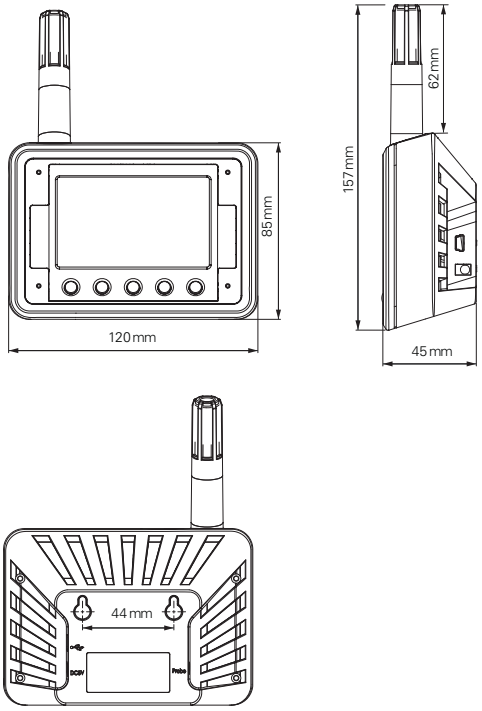

General	
Parameters	CO_2, relative humidity and temperature
Range of application	0…50 °C / 0…100 %RH, non-condensing
Power supply	Via AC1214 AC adapter (included in the delivery package)
IP protection	IP30
Clock	Real time clock with 2 min. battery backup
Alarm	Adjustable for CO_2 measurement
Technical information/Functions	
Current consumption	50 mA
Warm-up time	‹1 min.
Memory capacity	40,000 values with time stamp, automatic recording (%RH / °C / CO_2 / external temperature probe)
CO_2 measurement	
Measurement principle	Non dispersive infrared (NDIR) with automatic baseline correction (ABC)
Measurement range	0…5,000 ppm
Accuracy at 23 °C ±5 K	±30 ppm ±5 % of the measured value
Response time	‹10 sec @ 30 cc/min. flow, ‹3 min diffusion time
Adjustment point	Automatic calibration, manual calibration at 400 ppm
Pressure dependence	+1.6 % reading per kPa
Null drift	‹10 ppm/year
Maintenance	No maintenance (standard indoor application)
Humidity measurement	
Humidity sensor	ROTRONIC HYGROMER® IN-1
Measurement range	0…100 %RH
Accuracy at 23 °C ±5 K	‹2.5 %RH (10…90 %RH)
Adjustment points	35, 80 %RH
Response time τ63	‹30 s, without filter
Long-term stability	‹1.5 %RH / year
Temperature measurement	
Sensor	Thermistor
Measurement range	-20…60 °C
Accuracy at 23 °C ±5 K	±0.3 °K
Response time	4 s
Conformities / Housing	
CE / EMC compatibility	EMC DIRECTIVE 2004/108/EC, standard EN61326-1:2006
Housing material	ABS
Dimensions	157 x 120 x 45 mm
Weight	Approx. 200 g
Software	ROTRONIC SW21 free of charge, HW4 subject to charge

External temperature probe AC1215 (available as optional extra)	
Sensor	Thermistor
Measurement range	-20…70 °C
Accuracy	±0.6 °C @ 5…40 °C, ±1.0 °C rest of range
Material of probe	Stainless steel
Material of handle	PVC
Probe dimensions	Ø 3.8 x 100 mm
Handle dimensions	Ø 12.3 x 74 mm
Cable length	116 cm
Connector	Jack plug Ø 2.5 x 11 mm

Suitable accessories

Art. no.	Description
ER-15	Humidity calibration device
EA35-SCS	Humidity standard 35 %RH
EA80-SCS	Humidity standard 80 %RH
AC1215	External temperature probe

Included

1 CL11 data logger
1 AC adapter AC1214
1 ROTRONIC software SW2.x

rotronic
MEASUREMENT SOLUTIONS
ROTRONIC AG, Grindelstrasse 6, CH - 8303 Bassersdorf, Tel. +41 44 838 11 11, Fax +41 44 836 44 24, www.rotronic.ch
ROTRONIC Instruments (UK) Ltd, Crompton Fields, Crompton Way, Crawley, West Sussex, RH10 9EE, UK, Phone +44 (0)1293 571000, Fax +44 (0)1293 571008, www.rotronic.co.uk
ROTRONIC Instrument Corp, 135 Engineers Road, Hauppauge, NY 11788, USA , Phone, +1 631 427-3898, Fax, +1 631 427-3902, www.rotronic-usa.com

59036E/2013-11