P5X833L

POWER TERMINAL PROTECTIONS LONG VERSION, THREE-POLE TERMINAL COVER FOR P5ME3PS0800



Mechanical features

Weight	g	900

Dimensions

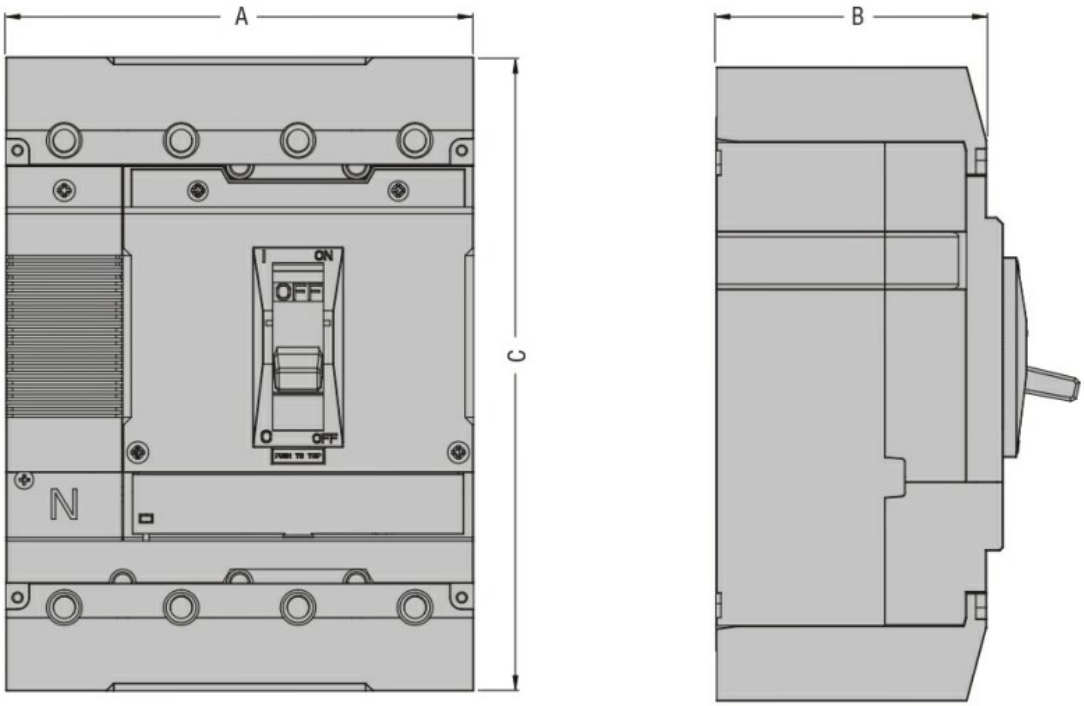

P5X8...	A [mm]	B [mm]	C [mm]
P5X831L	105	80,8	321
P5X831S			190
P5X841L	140		321

The characteristics described in this document are subject to updates or modifications at any time. The descriptions, technical and functional information, illustrations and instructions in this brochure are purely illustrative, and are consequently not contractually binding

P5X841S			190
P5X832L	140	105	479
P5X832S			300
P5X842L	186		479
P5X842S			300
P5X833L	210	128	600
P5X833S			360
P5X843L	280		600
P5X843S			360

Certifications and compliance

Certificates

ETIM classification

EC000066 - Power contactor, AC switching

The characteristics described in this document are subject to updates or modifications at any time. The descriptions, technical and functional information, illustrations and instructions in this brochure are purely illustrative, and are consequently not contractually binding