E40210

Regulating valve

SHUT-OFF VALVES

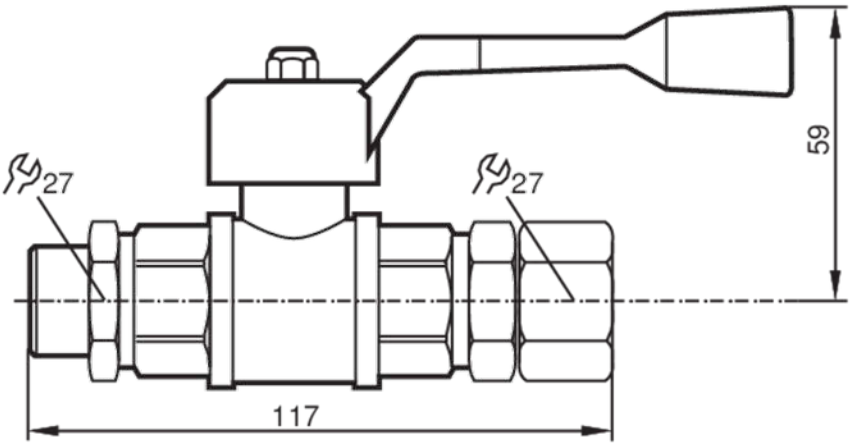

Mechanical data		
Weight	[g]	563.2
Dimensions	[mm]	M22 x 1.5 / L = 117
Thread designation		M22 x 1.5
Materials		brass
Remarks		
Pack quantity		2 pcs.