Modulostar® CMS10

Modular fuse-holders

IEC Cylindrical Fuse Holders

The innovative and comprehensive Modulostar® range of Mersen fuse-holders. Modular fuse-holders are finger-safe under IEC standards to an IP20 grade of protection, including fuse changing (with the flick of a finger). Modular fuse-holders are available in 1, 2, 3 or 4 poles, with or without visual blown fuse indicator, in IEC version or IEC + UL version. Multi-pole units can also be field assembled by ordering pin-ties assembly kit. In size 14 or 22, the range also offers the possibility to use microswitches (supplied with the holders or ordered separately) to allow remote indication. Modulostar® range is made of tough and durable thermoplastic or thermoset material.





Features Benefits

- Finger safe
- Degree of protection: IP20
- Optional visual blown fuse indicator
- DIN rail mounting
- Modular design
- Lockable
- Multi-pole assembly kit available
- Sealable in closed and open position
- Plastic material UL94V2 mini
- Flame retardant materials with glow wire flammability index to 960°C
- Schock and vibration tested for marine and railway applications

Applications

- All circuits up to 690V for protection of motors, transformers, low voltage distribution, control circuits, drive protection
- Non-load operation

Technical data overview

Voltage AC	690 VAC
Voltage DC	690 VDC
Amper (A)	32 A
Product Size	For cylindrical fuse links 10.3x38.1 AM, gG and 10.3x38 Mersen Protistor and HP6M fuse-links
Mounting	Installation on to DIN rails to EN 60715
SCCR	200kA
Number of Poles	1 to 4 poles

Standards

IEC 60269-2 and IEC 60947-3 Compliance

RoHS Compliant

Plastic material: NF 16101 & 16102 Requirement 2 Compliant

Shock and vibration tested for marine and railway applications

MERSEN reserves the right to change, update or correct, without notice, any information contained in this datasheet.

Product range


CMS810N


CMS101


CMS102


CMS103


CMS103N

Modulostar® fuse-holders for 10.3x38.1 fuse-links, without indicator

Catalog number	Reference number	Number of poles/ phases	Design	Weight	Package
CMS810N	D305006	N	CMS10 neutral conductor	65.8 g	12
CMS101	T305020	1	CMS10 single pole	61.3 g	12
CMS101N	V305021	1 + N	CMS10 single pole + neutral conductor	131.6 g	6
CMS102	W305022	2	CMS10 double pole	121.6 g	6
CMS103	X305023	3	CMS10 triple pole	197.5 g	4
CMS103N	Y305024	3 + N	CMS10 triple pole + neutral conductor	263.3 g	3
CMS104	Z305025	4	CMS10 quadruple pole	243.3 g	3


CMS101I

Modulostar® fuse-holders for 10,3x38,1 fuse-links, with indicator

Catalog number	Reference number	Number of poles/ phases	Design	Weight	Package
CMS101I	A305026	1	CMS10 single pole	60.8 g	12
CMS101NI	B305027	1 + N	CMS10 single pole + neutral conductor	131.6 g	6
CMS102I	C305028	2	CMS10 double pole	121.6 g	6
CMS103I	D305029	3	CMS10 triple pole	182.5 g	4
CMS103NI	E305030	3 + N	CMS10 triple pole + neutral conductor	263.3 g	3
CMS104I	F305031	4	CMS10 quadruple pole	243.3 g	3

MERSEN reserves the right to change, update or correct, without notice, any information contained in this datasheet.

Technical Data

	CMS10	CMS10I
Size	10x38	10x38
Number of poles/phases	1, 1+N, 2, 3, 3+N, 4	1, 1+N, 2, 3, 3+N, 4
Conventional free air thermal current with fuse links I_{th}	32 A	32 A
Power dissipation at I_{th}	3 W	3 W
Utilisation category	AC20B/DC20B	AC20B/DC20B
Rated insulation voltage U_i	690 V	690 V
SCCR	200 kA	200 kA
Rated impulse withstand voltage U_{imp}	6 kV	6 kV
Degree of protection	IP 20	IP 20
Voltage limit for blown fuse indicator	-	230 to 690V AC/DC
Indication System	-	with indicator
Connection	Max. tightening torque: 2.2Nm (19lbs.-in) Rigid wire = 1-16mm² (16-6AWG) Multistrand wire = 0.75-10mm² (18-8AWG) PZ2 or flat 5.5x1mm screw drivers recommended (max. diameter 6mm)	Max. tightening torque: 2.2Nm (19lbs.-in) Rigid wire = 1-16mm² (16-6AWG) Multistrand wire = 0.75-10mm² (18-8AWG) PZ2 or flat 5.5x1mm screw drivers recommended (max. diameter 6mm)
Operating temperature	-25°C to 60°C	-25°C to 60°C
Storage temperature	-25°C to 80°C	-25°C to 80°C
Vibration	Withstand on the 3 main axis*: Sinusoidal vibration testing according to IEC 60068-2-6 2 to 13Hz x= 1 mm peak 13 to 100Hz y= 0.7g peak according to french marine application Random vibration testing according to IEC 61373 Category 1 Class B	Withstand on the 3 main axis*: Sinusoidal vibration testing according to IEC 60068-2-6 2 to 13Hz x= 1 mm peak 13 to 100Hz y= 0.7g peak according to french marine application Random vibration testing according to IEC 61373 Category 1 Class B
Shock	Shock testing according to IEC 61373 Category 1 Class B Shock testing according to IEC 60068-2-27 15g/11ms/18 shocks * for specific usage please contact us	Shock testing according to IEC 61373 Category 1 Class B Shock testing according to IEC 60068-2-27 15g/11ms/18 shocks * for specific usage please contact us

Specific usage conditions

Ambient temperature	>20°C	30°C	40°C	50°C	60°C
Derating factor (I_e)	1	0.95	0.9	0.8	0.7

No of poles (side by side)	1 to 3	>/= 4
Derating factor of current (I_{th})	1	0.9

Nominal current of fuse-link gR	20 A	25 A	30 A	32 A
Max. operational current in fuse-holder	19 A	22 A	25 A	27 A
Cable wire section	2.5 mm²	4 mm²	6 mm²	6 mm²

MERSEN reserves the right to change, update or correct, without notice, any information contained in this datasheet.

Dimensions

Dimensions in mm

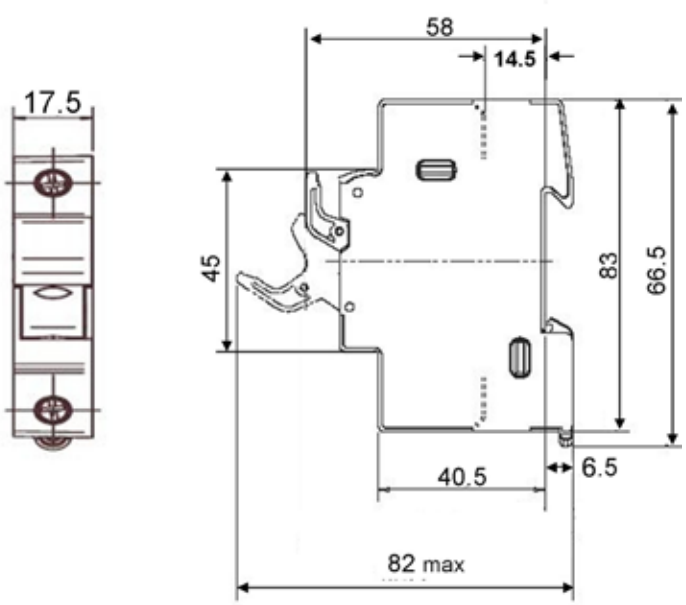

Accessories



CMS8010PAK + fuse-holder

Kit for multi phase connection

Catalog number	Reference number	Description	Weight kg[1)]	Package
CMS810PAK	Z233725	Links for connection of multipole units	0,00058	12



TAGLOCKCMS810 LOCK

Locking devices

Catalog number	Reference number	Description	Weight kg[1)]	Package
TAGLOCKCMS810	A235773	Locking kit (Tag and lockout)	0.009	1
LOCK	M223525	Padlock	0.042	1

1) weight in kg per piece or set including package

MERSEN reserves the right to change, update or correct, without notice, any information contained in this datasheet.

Accessories



TBB1A TBB1C



TBB23A TBB23C

Power supply

Catalog number	Reference number	Description	Application	Weight kg[1)]	Package
TBB1A	D210315	1 phase axial incoming power supply	Max. rms current 90A	0.010	50
TBB1C	E210316	1 phase lateral incoming power supply	Max. rms current 90A	0.010	50
TBB23A	F210317	2 & 3 phases axial incoming power supply	Max. rms current 90A	0.023	50
TBB23C	G210318	2 & 3 phases lateral incoming power supply	Max. rms current 90A	0.023	50



CMS810BB4F3



CMS810BB3F4



CMS810BB2F6



CMS810BB1F13

Wiring bars / Insulated bus bars

Catalog number	Reference number	Description	Application	Weight kg[1)]	Package
CMS810BB4F3	X210309	quadruple pole, 10 mm², partition 17,5 mm (distance of poles), peg design, L-shaped	Max. rms current 100A, for installation of 3 modules	0.106	10
CMS810BB3F4	W210308	triple pole, 10 mm² partition 17,5 mm (distance of poles), peg design, L-shaped	Max. rms current 100A, for installation of 4 modules	0.085	10
CMS810BB2F6	V210307	double pole, 10 mm², partition 17,5 mm (distance of poles), peg design, L-shaped	Max. rms current 63A, for installation of 6 modules	0.075	10
CMS810BB1F13	T210306	single pole, 10 mm², partition 17,5 mm (distance of poles), peg design, L-shaped	Max. rms current 63A, for installation of 13 modules	0.036	10

1) weight in kg per piece or set including package

MERSEN reserves the right to change, update or correct, without notice, any information contained in this datasheet.