IY5062

Inductive sensor

IYB31,5-BPKG/AS

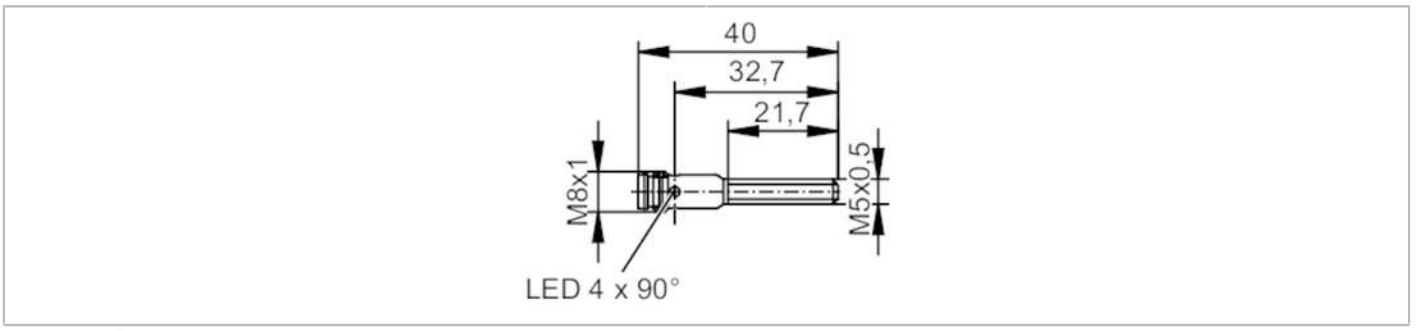

Product characteristics		
Electrical design		PNP
Output function		normally open
Sensing range	[mm]	1.5
Housing		threaded type
Dimensions	[mm]	M5 x 0.5 / L = 40
Electrical data		
Operating voltage	[V]	10...36 DC
Current consumption	[mA]	15; (24 V)
Protection class		III
Reverse polarity protection		yes
Outputs		
Electrical design		PNP
Output function		normally open
Max. voltage drop switching output DC	[V]	2.5
Permanent current rating of switching output DC	[mA]	100
Switching frequency DC	[Hz]	2000
Short-circuit protection		yes
Type of short-circuit protection		pulsed
Overload protection		yes
Detection zone		
Sensing range	[mm]	1.5
Real sensing range Sr	[mm]	1.5 ± 10 %
Operating distance	[mm]	0...1.2
Accuracy / deviations		
Correction factor		steel: 1 / stainless steel: 0.7 / brass: 0.5 / aluminium: 0.4 / copper: 0.3
Hysteresis	[% of Sr]	1...15
Switch point drift	[% of Sr]	-10...10
Operating conditions		
Ambient temperature	[°C]	-25...70
Protection		IP 65; IP 67

IY5062

Inductive sensor

IYB31,5-BPKG/AS

Tests / approvals			
EMC		EN 61000-4-2 ESD	4 kV CD / 8 kV AD
		EN 61000-4-3 HF radiated	10 V/m
		EN 61000-4-4 Burst	2 kV
		EN 61000-4-6 HF conducted	10 V
		EN 55011	class B
UL approval		Ta	-25...70 °C
		Enclosure type	Type 1
		power supply	Limited Voltage/Current
		UL Approval no.	A053
		File number UL	E174191
Mechanical data			
Weight	[g]	10.5	
Housing		threaded type	
Mounting		flush mountable	
Dimensions	[mm]	M5 x 0.5 / L = 40	
Thread designation		M5 x 0.5	
Materials		housing: stainless steel (303/1.4305); LED window: PPSU; sensing face: POM	
Tightening torque	[Nm]	2	
Displays / operating elements			
Display		switching status	4 x 90° LED, yellow
Accessories			
Items supplied		lock nuts: 2	
Remarks			
Pack quantity		1 pcs.	

Electrical connection - plug

Connector: 1 x M8; coding: A



IY5062

Inductive sensor

IYB31,5-BPKG/AS

Connection

