RoHS ✔

Typ/ type	Polzahl/ number of poles		Kabeldurchlass/ cable outlet	SW
RSC 8/9	8	Male 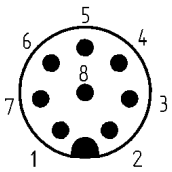	Ø 6-8 mm	19

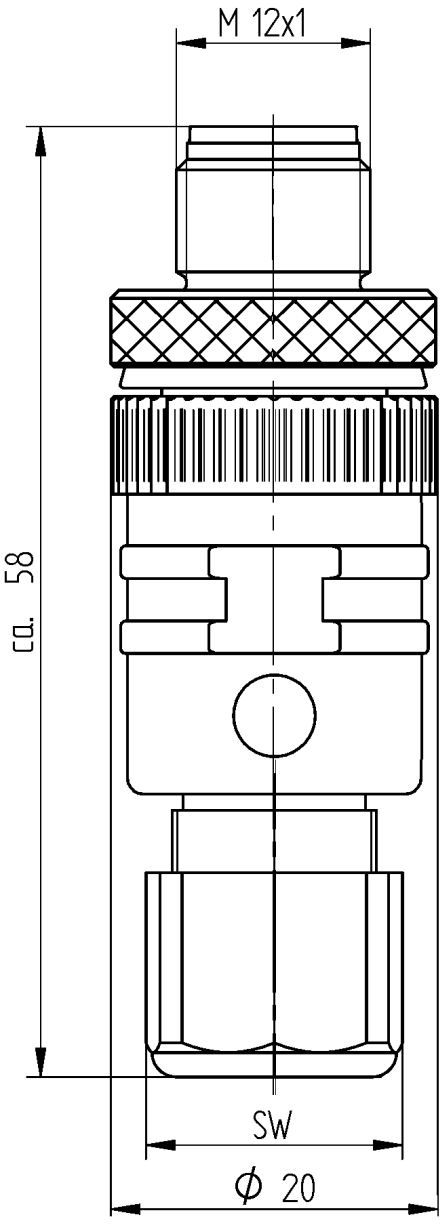

The information/details in this datasheet merely contain general descriptions or performance factors which, when applied in an actual situation, do not always correspond with the described form, and may be amended by way of the further development of products. The desired performance factors shall only be binding if these are expressly agreed on conclusion of the contract.

DIN ISO 5456-2

Product description

Type	RSC 8/9
Type of contacts	male, screw terminal
Number of contacts	8
Order No	see standard products
Conductor size	max. 0,50 mm²
Construction type	A-coded
Color housing	black
Color contact bearer	black

Technical data

Operating voltage	30 V AC/DC
Rated voltage	30 V
Rated current *	1.5 A
Rated impulse voltage	0,8 kV
Pollution degree	3 acc. to DIN EN 60664-1 (VDE 0110-1)
Contact resistance	< 10 mOhm
Insulation resistance	> 10^9 Ohm
Type of connection	screw terminal

* Notice derating

Materials

Contact	CuZn
Contact plating	Cu/Au
Contact bearer	PA
Knurled screw	GD-Zn, nickel-plated

Environmental conditions

Protection class (IEC 60529) *	IP65
Temperature range (connector)	-25°C to +90°C, notice Derating

Good chemical resistance.
The resistance has to be checked in individual cases.

* only if mounted and locked in combination with Hirschmann / Lumberg connector.

Additional technical data

Fastening torque (cable gland)	PG 9: (120-130) Ncm

Notes

Do not connect or disconnect under load.
Insert rotatable through 90°.

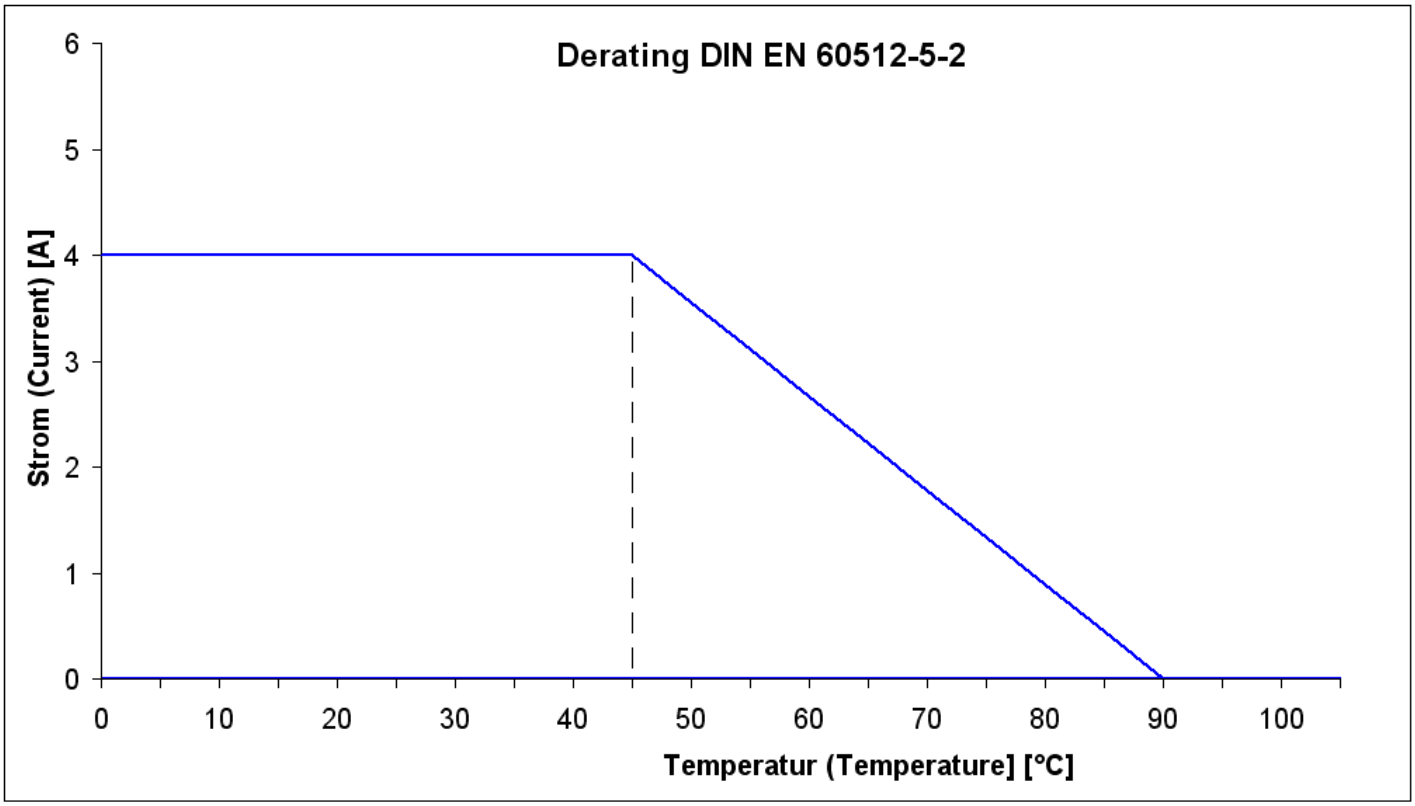

product overview

Article-No.	Type
000-044-971	RSC 8/9