Description

- The smallest housing out of the H-B series.
- For inserts with high properties.



General Characteristics

Series	H-B 6
Version	Socket housing M20 / M25 (Article 79005600)
Locking	Single lever
Cable entry	1
Protection (DIN EN 60529)	IP 65 (latched)
Protection (NEMA 250, UL50E)	4, 12 (latched)
Temperature Range	-40°C to +100°C, short term up to +125°C

Materials and Surfaces

Housing	Aluminium alloy, powder-coated, grey
Bolt	Heat-treatable steel, zinc-plated
Lever	Steel, zinc-plated
Profile Seal	NBR

Approvals

VDE-Approval, VDE-REG.-Nr.	B437

Standard

Safety Standard	IEC 61984

We reserve all rights according to DIN ISO 16016.

Technische Zeichnungen

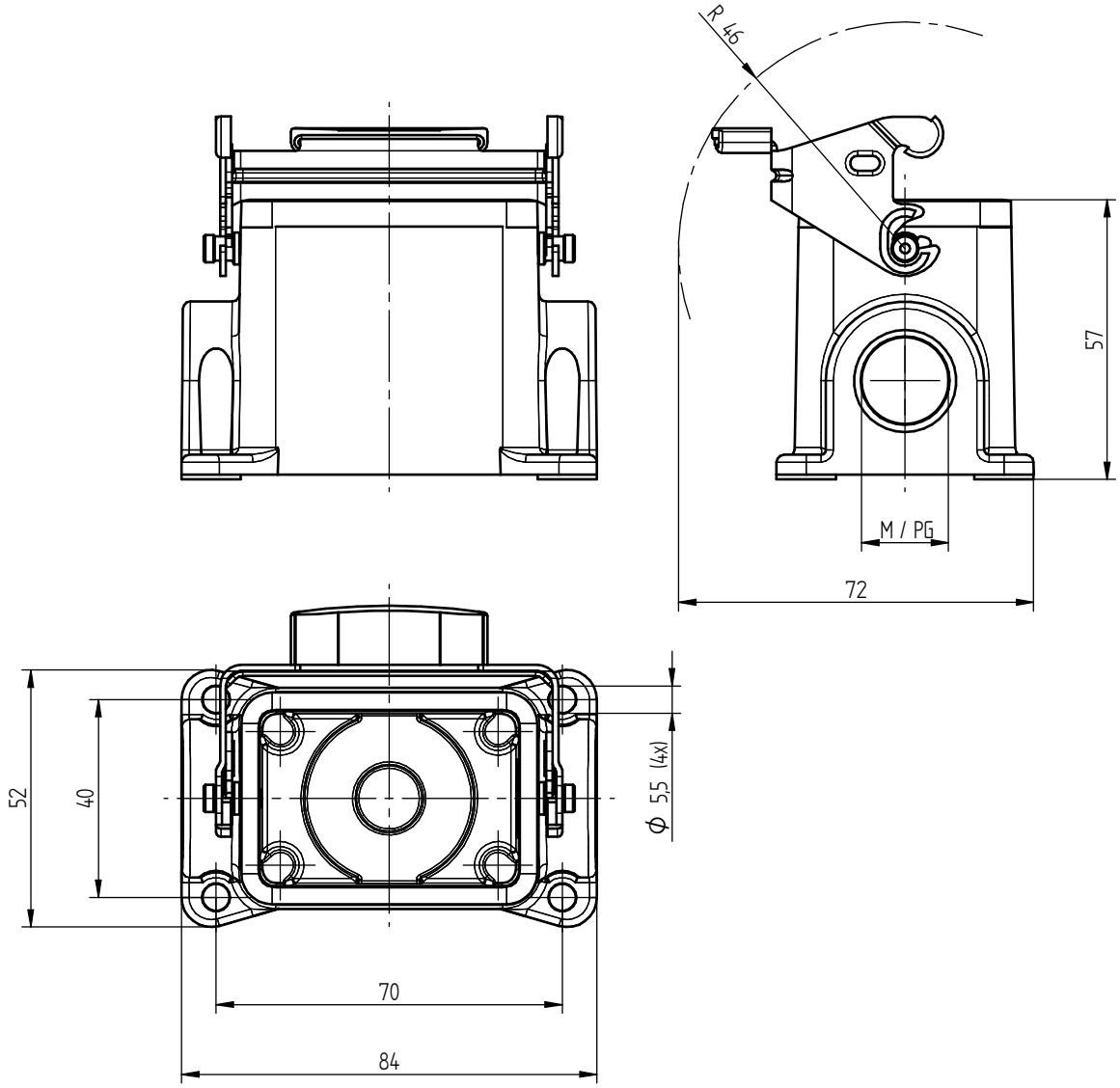

We reserve all rights according to DIN ISO 16016.

Technical Drawings



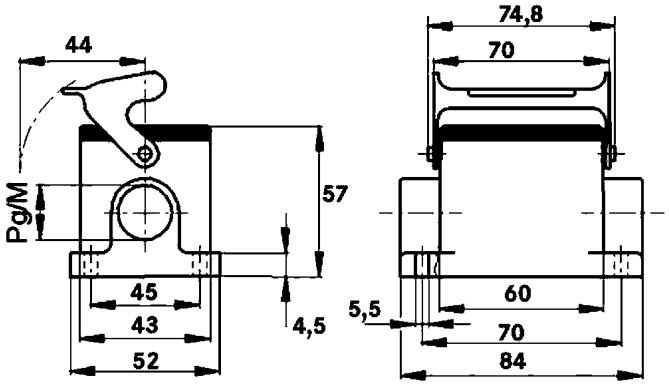

Automation

Industrial machinery and plant engineering

Mechanical resistance

Robust

Waterproof

Info

Universal, robust metal housings size H-B 6

Application range

Plant engineering
Control engineering
Plastics industry

Remark

Photographs are not to scale and do not represent detailed images of the respective products.

We reserve all rights according to DIN ISO 16016.