

100-mm base with aluminum tube and foot

Part no. SL4-PIB-100
Article no. 171297

Catalog No. SL4-PIB-100

Powering Business Worldwide

Delivery programme

Product range			SL4 signal towers
Basic function			Base module
Connection technique			Push in terminals
Mounting type			for horizontal mounting
Fitted with			Base with aluminium tube and plastic foot including cover
Tube length			100 mm
Number of modules			max. 5 modules
Colour			
			black Aluminum color tube
			
For use with			SL4-L-… SL4-BL-… SL4-FL-… SL4-AP-...
Connection to SmartWire-DT			no

Approvals

Product Standards	IEC/EN 60947-5-1; UL 508; CSA-C22.2 No. 14-10; CSA-C22.2 No. 94-91; CE marking
UL File No.	E29184
UL Category Control No.	NKCR
CSA File No.	UL report applies to both US and Canada
CSA Class No.	NKCR7
North America Certification	UL listed, certified by UL for use in Canada
Degree of Protection	UL Type 4, 4X, 13

General

Standards			IEC/EN 60947-5-1
Climatic proofing			Damp heat, constant, to IEC 60068-2-78 Damp heat, cyclic, to IEC 60069-2-30
Mounting position			As required
Mechanical shock resistance		g	> 15 according to IEC 60068-2-27 Shock duration 11 ms Sinusoidal
IEC degree of protection			IP66 IEC/EN 60529
Protection type UL			Type 4, 4X, 13
Cap colour			
			black Aluminum color tube
Ambient temperature		°C	-30 - +60
Number of signal elements			Max. 5 with standard base Max. 10 with base for mounting on both sides
Terminal capacity			
Solid or flexible conductor		mm^2	0.2 - 1.5
Solid or flexible conductor, with ferrule		mm^2	0,25 - 1,5
Flexible with ferrule with plastic collar		mm^2	0.25 - 0.75

			AWG 24 - AWG 16

Contacts

Rated impulse withstand voltage	U_{imp}	V AC	4000
Rated insulation voltage	U_i	V	250
Overvoltage category/pollution degree			III/3

modules

Voltage levels			24 V AC/DC ± 10 % 110/120 V AC ± 10 % 230/240 V AC ± 10 %

Technical data ETIM 5.0

Low-voltage industrial components (EG000017) / Connection module for signal tower (EC001152)			
Electric engineering, automation, process control engineering / Low-voltage switch technology / Command and alarm device / Signal column element, connection module (ecl@ss8-27-37-12-32 [AKF050010])			
Connection type auxiliary circuit			Spring clamp connection
Tube mounting possible			No
Bracket mounting possible			Yes
Floor mounting possible			Yes
Colour			-
Suitable for AS interface			No

Dimensions

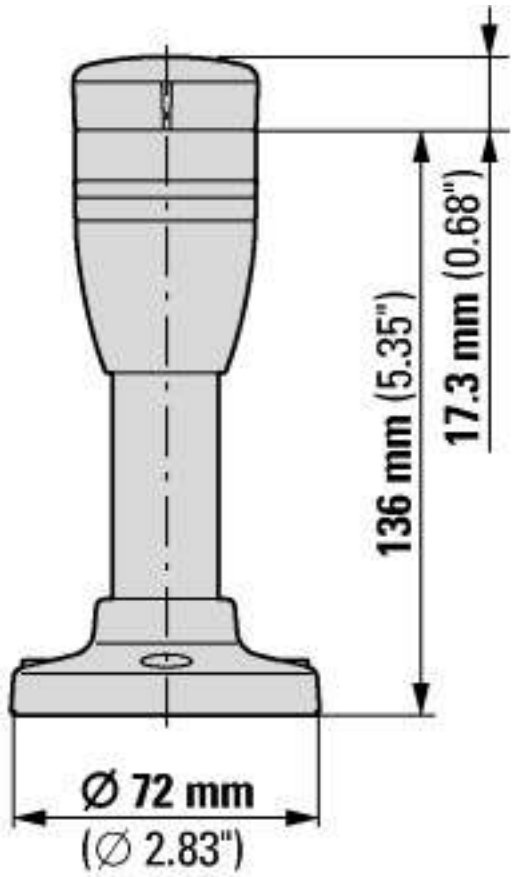

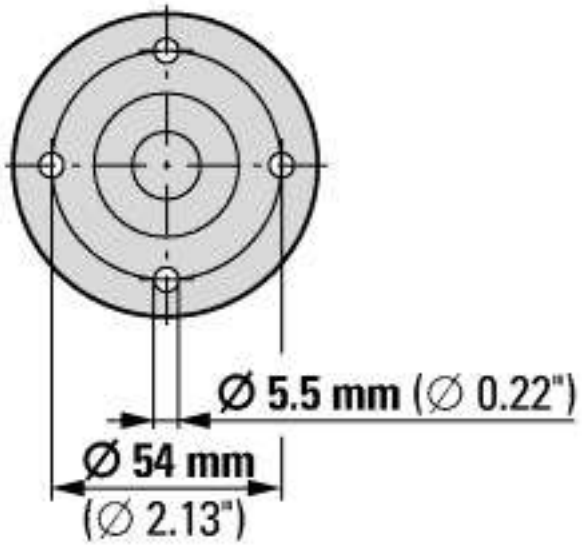

Additional product information (links)

IL047001ZU SL4 Main Instruction	
IL047001ZU SL4 Main Instruction	ftp://ftp.moeller.net/DOCUMENTATION/AWA_INSTRUCTIONS/IL047001ZU2013_02.pdf
IL047001ZU SL4, instructions générales	ftp://ftp.moeller.net/DOCUMENTATION/AWA_INSTRUCTIONS/IL047001ZU2013_02.pdf
IL047002ZU SL4 Drill pattern	
IL047002ZU SL4 Drill pattern	ftp://ftp.moeller.net/DOCUMENTATION/AWA_INSTRUCTIONS/IL047002ZU2013_02.pdf
IL047002ZU plan de perçage pour SL4	ftp://ftp.moeller.net/DOCUMENTATION/AWA_INSTRUCTIONS/IL047002ZU2013_02.pdf

© 07/2014 by Eaton Industries GmbH