IA series

Low profile pushbutton switches for harsh environments • bushing Ø 16 mm • momentary



DISTINCTIVE FEATURES

Resistant to frost, sand and hydrocarbons
Tactile feedback
Front panel sealed to IP65 and IP67



ENVIRONMENTAL SPECIFICATIONS

- Front panel sealing :
  IP65 and IP67 acc. to IEC 60529
- Salt spray : IEC 512-6, test 11f
- Operating temperature : -20 °C to +65 °C (-4 °F to +149 °F)

ELECTRICAL SPECIFICATIONS

- Max. current/voltage rating with resistive load : 2 A 24 VDC
- Initial contact resistance : 100 mΩ max.
- Insulation resistance : 100 MΩ min. at 500 VDC
- Dielectric strength : 500 Vrms
- Electrical life at full load : 1,000,000 cycles

GENERAL SPECIFICATIONS

- Panel thickness : 7 mm (.276) max.
- Total travel : 1.5 mm (.059) ± 0.3 mm
- Typical operating force : 7 N ± 2 N
- Low level or mechanical life : 1,000,000 cycles
- Torque : 0.5 to 1 Nm max. applied to nut

MATERIALS

- Case/bushing : thermoplastic
- Actuator : polyurethane
- Contacts : silver, gold plated
- Multi-wire leads AWG20, section 0.6 mm^2.
- Terminal seal : epoxy

The company reserves the right to change specifications without notice.

IA series

Low profile pushbutton switches for harsh environments • bushing Ø 16 mm • momentary

PANEL MOUNTING

- Panel cut-out Ø 16.2 mm (.637)
- Min. pitch for matrix mounting :
  - with standard hex nut : 27 x 27 mm (1.062 x 1.062)
  - with knurled nut U3327: 20 x 20 mm (.787x.787)

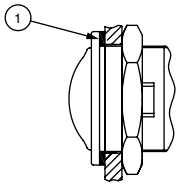

① - Flat seal

ELECTRICAL FUNCTIONS

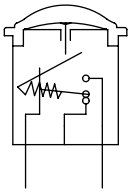

Function 3 (NO)

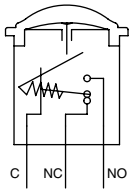

Function 5 (NC+NO)

IA series

Low profile pushbutton switches for harsh environments • bushing Ø 16 mm • momentary

BUILD YOUR PART NUMBER

BASIC PART NUMBER

IA	_	_	_
SERIES	ACTUATOR SHAPES	ELECTRICAL FUNCTIONS	TERMINALS

ACTUATOR SHAPES

R	Round, curved

ELECTRICAL FUNCTIONS

3	Normally open (NO)
5	NC+NO combined

TERMINALS

F	Flying leads

OPTIONS

_	_	_
CONTACTS	ACTUATOR COLORS	CASE COLOR

CONTACTS

1	Silver, gold plated

ACTUATOR COLORS

1	Blue
2	Black
3	Green
4	Grey
5	Yellow
6	Red
7/1	White
9	Orange

CASE COLOR

00	Black

ABOUT THIS SERIES

On the following pages, you will find successively basic part numbers of switches and options in the same order as in above chart.

A sealing boot is available to protect the switches against frost and sand. See "Sealing Boots" section of website.

Mounting accessories : Standard hardware supplied : 1 hex nut 19 mm (.748) across flats and 1 flat seal. Knurled nut U3327 available on request.

IA series

Low profile pushbutton switches for harsh environments • bushing Ø 16 mm • momentary

MODELS



IAR3F	Normally open (NO)
IAR5F	NC+NO combined

Wire colors (NC+NO) : black = common, brown = NC, blue = NO
NO model has 2 terminals only.

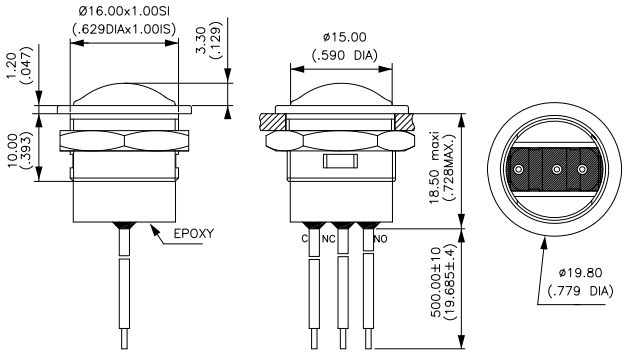

CONTACT MATERIAL

BASIC P/N

1	Silver, gold plated

ACTUATOR COLORS

BASIC P/N

1	Blue
2	Black
3	Green
4	Grey
5	Yellow
6	Red
7/1	White
9	Orange

CASE COLORS

BASIC P/N

00	Black